www.hatcocorp.com

Register Online!
(see page 2)

Hatco CORPORATION ®

SERV-RITE™

Portable Shelves and Buffet Warmers

SRB, SRBW, SRG, SRGBW, SRSS, and SRSSBW Series

Installation and Operating Manual

P/N 07.04.435.00

DISCONTINUED

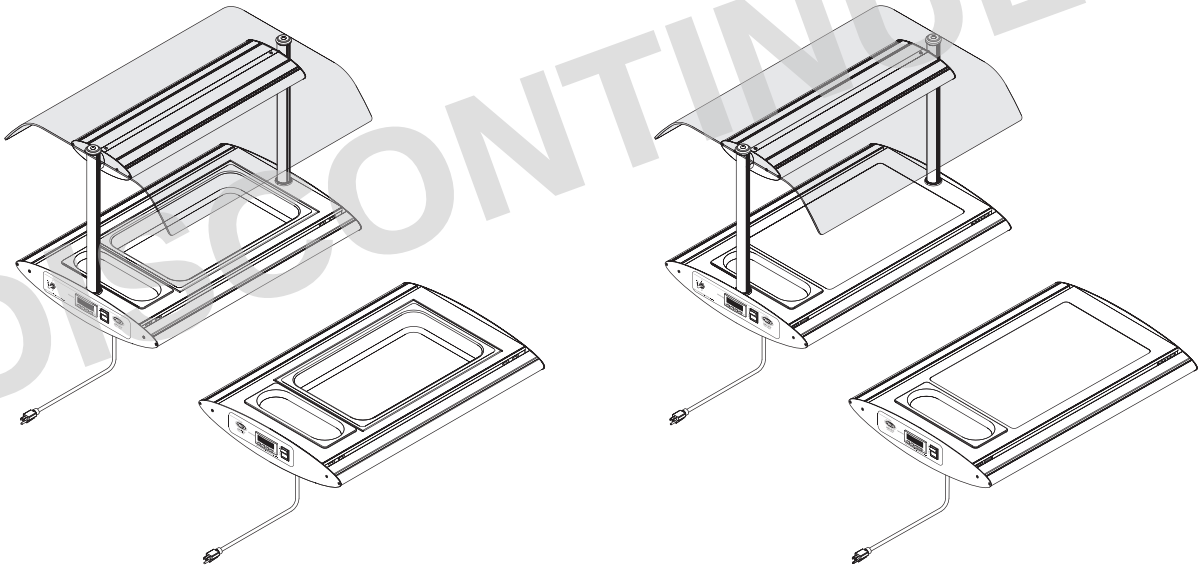

⚠ WARNING

Do not operate this equipment unless you have read and understood the contents of this manual! Failure to follow the instructions contained in this manual may result in serious injury or death. This manual contains important safety information concerning the maintenance, use, and operation of this product. If you're unable to understand the contents of this manual, please bring it to the attention of your supervisor. Keep this manual in a safe location for future reference.

⚠ ADVERTENCIA

No opere este equipo al menos que haya leído y comprendido el contenido de este manual! Cualquier falla en el seguimiento de las instrucciones contenidas en este manual puede resultar en un serio lesión o muerte. Este manual contiene importante información sobre seguridad concerniente al mantenimiento, uso y operación de este producto. Si usted no puede entender el contenido de este manual por favor pregunte a su supervisor. Almacenar este manual en una localización segura para la referencia futura.

⚠ AVERTISSEMENT

Ne pas utiliser cet équipement sans avoir lu et compris le contenu de ce manuel ! Le non-respect des instructions contenues dans ce manuel peut entraîner de graves blessures ou la mort. Ce manuel contient des informations importantes concernant l'entretien, l'utilisation et le fonctionnement de ce produit. Si vous ne comprenez pas le contenu de ce manuel, veuillez le signaler à votre supérieur. Conservez ce manuel dans un endroit sûr pour pouvoir vous y référer plus tard.

© 2012 Hatco Corporation

CONTENTS

Important Owner Information **2**
Introduction **2**
Important Safety Information **3**
Model Description **4**
Model Designation **5**
Specifications **5**
Plug Configurations 5
Electrical Rating Chart — SRB and SRG Series 5
Electrical Rating Chart — SRSS Series 6
Dimensions — SRB Series 6
Dimensions — SRG and SRSS Series 7
Installation **8**
General 8
Operation **9**
General 9
Changing the Setpoint Temperature 10
Locking/Unlocking the Digital Temperature Control 10
Maintenance **11**
General 11
Cleaning 11
Cleaning the Stone Surface 11
Replacing the Heat Lamps 12
Troubleshooting Guide **13**
Options and Accessories **14**
Limited Warranty **15**
Authorized Parts Distributors ..... **Back Cover**

IMPORTANT OWNER INFORMATION

Record the model number, serial number, voltage, and purchase date of the unit in the spaces below (specification label located on the bottom of the unit). Please have this information available when calling Hatco for service assistance.

Model No. _____

Serial No. _____

Voltage _____

Date of Purchase _____

Register your unit!
Completing online warranty registration will prevent delay in obtaining warranty coverage. Access the Hatco website at **www.hatcocorp.com**, select the *Parts & Service* pull-down menu, and click on "Warranty Registration".

Business Hours: 8:00 AM to 5:00 PM Central Standard Time (C.S.T.)

(Summer Hours: June to September – 8:00 AM to 5:00 PM C.S.T. Monday through Thursday 8:00 AM to 2:30 PM C.S.T. Friday)

Telephone: (800) 558-0607; (414) 671-6350

E-mail: partsandservice@hatcocorp.com

Fax: (800) 690-2966 (Parts and Service)
(414) 671-3976 (International)

24/7 24 Hour 7 Day Parts and Service Assistance available in the United States and Canada by calling (800) 558-0607.

Additional information can be found by visiting our web site at **www.hatcocorp.com**.

DISCONTINUED

INTRODUCTION

Hatco Serv-Rite™ Portable Shelves and Buffet Warmers are designed to keep prepared foods at optimum serving temperatures without affecting quality. They are perfect for self-serve buffet areas and customer serving points. All Serv-Rite warmers feature a thermostatically-controlled heated shelf. SRBW, SRGBW, and SRSSBW models feature an overhead halogen heat lamp.

Hatco Serv-Rite Portable Shelves and Buffet Warmers are products of extensive research and field testing. The materials used were selected for maximum durability, attractive appearance, and optimum performance. Every unit is inspected and tested thoroughly prior to shipment.

This manual provides the installation, safety, and operating instructions for Hatco Serv-Rite warmers. Hatco recommends all installation, operating, and safety instructions appearing in this manual be read prior to installation or operation of the Serv-Rite warmer.

Safety information that appears in this manual is identified by the following signal word panels:

⚠ WARNING

WARNING indicates a hazardous situation which, if not avoided, could result in death or serious injury.

⚠ CAUTION

CAUTION indicates a hazardous situation which, if not avoided, could result in minor or moderate injury.

NOTICE

NOTICE is used to address practices not related to personal injury.

Read the following important safety information before using this equipment to avoid serious injury or death and to avoid damage to equipment or property.

⚠ WARNING

ELECTRIC SHOCK HAZARD:

- **Plug unit into a properly grounded electrical receptacle of the correct voltage, size, and plug configuration. If plug and receptacle do not match, contact a qualified electrician to determine and install proper voltage and size electrical receptacle.**
- **Turn OFF power switch, unplug power cord, and allow unit to cool before performing any cleaning, adjustments, or maintenance.**
- **DO NOT submerge or saturate with water. Unit is not waterproof. Do not operate if unit has been submerged or saturated with water.**
- **Unit is not weatherproof. Locate unit indoors where ambient air temperature is a minimum of 70°F (21°C).**
- **Do not pull unit by power cord.**
- **Discontinue use if power cord is frayed or worn.**
- **Do not attempt to repair or replace a damaged power cord. Cord must be replaced by Hatco, an Authorized Hatco Service Agent, or a person with similar qualifications.**
- **Never overload extension cord. Use heavy duty, three-wire extension cord only. Make sure current carrying capacity of extension cord complies with electrical rating of unit.**
- **Do not steam clean or use excessive water on the unit.**
- **This unit is not "jet-proof" construction. Do not use jet-clean spray to clean this unit.**
- **Do not clean the unit when it is energized or hot.**
- **Do not allow liquids to spill into the unit.**
- **Do not fill SRB and SRBW models with water. They are dry heat units only, not steam table units.**
- **Use only Genuine Hatco Replacement Parts when service is required. Failure to use Genuine Hatco Replacement Parts will void all warranties and may subject operators of the equipment to hazardous electrical voltage, resulting in electrical shock or burn. Genuine Hatco Replacement Parts are specified to operate safely in the environments in which they are used. Some aftermarket or generic replacement parts do not have the characteristics that will allow them to operate safely in Hatco equipment.**

FIRE HAZARD: Locate the unit a minimum of 1″ (25 mm) from combustible walls and materials. If safe distances are not maintained, combustion or discoloration could occur.

Use only low pressure halogen light/heat lamps that meet or exceed National Sanitation Foundation (NSF) standards and are specifically designed for food holding areas.

⚠ WARNING

Make sure food product has been heated to the proper food-safe temperature before placing on the unit. Failure to heat food product properly may result in serious health risks. This unit is for holding preheated food product only.

Make sure all operators have been instructed on the safe and proper use of the unit.

This unit is not intended for use by children or persons with reduced physical, sensory, or mental capabilities. Ensure proper supervision of children and keep them away from the unit.

This unit must be serviced by qualified personnel only. Service by unqualified personnel may lead to electric shock or burn.

This unit has no "user-serviceable" parts. If service is required on this unit, contact an Authorized Hatco Service Agent or contact the Hatco Service Department at 800-558-0607 or 414-671-6350; fax 800-690-2966; or International fax 414-671-3976.

⚠ CAUTION

BURN HAZARD: Some exterior surfaces on unit will get hot. Use caution when touching these areas.

Locate unit at the proper counter height in an area that is convenient for use. Location should be level to prevent unit or its contents from falling accidentally and strong enough to support the weight of the unit and contents.

Make sure to clean and sanitize the heated stone shelves properly after using abrasives to deep clean the surface and before placing food product on unit.

NOTICE

Do not lay unit on the side with the control panel or damage to the unit could occur.

Use non-abrasive cleaners and cloths on glass and metal surfaces. Abrasive cleaners and cloths could scratch the finish of the unit, marring its appearance and making it susceptible to soil accumulation.

Do not slide pans across glass surface, use rough-bottomed pans, or drop anything on glass surface. Scratching or breakage may occur. Damage to glass surface or breakage of glass caused by misuse is not covered under warranty.

Do not place anything on top of glass sneeze guard. It is not designed to be a weight-bearing component.

Do not attempt to install glass sneeze guard alone. Installation of glass sneeze guard is a two-person job.

Do not move unit by lifting or pulling by the sneeze guard.

Do not touch halogen heat lamps with bare skin. Oils from the skin will cause premature failure of the lamps.

DISCONTINUED

MODEL DESCRIPTION

All Models

All Hatco Serv-Rite™ Portable Shelves and Buffet Warmers are ideal for self-serve buffet areas and customer serving points. Each is equipped with a removable utensil tray and is designed to hold hot food at safe serving temperatures. They feature a thermostatically-controlled heated shelf, durable stainless steel construction, sturdy aluminum extrusions, and a 6′ (1829 mm) power cord with plug. Units are available in several *Designer* colors as well as Gloss and Plated finishes.

NOTE: Buffet Warmer models are available with clear glass sneeze guards or optional smoked glass sneeze guards. Refer to the OPTIONS AND ACCESSORIES *section for all available options and accessories.*

Model SRB-1

The Serv-Rite Base (SRB) is a portable heated shelf. It is designed to hold either one full-size, two half-size, or three third-size steam table pans up to 2-1/2″ (64 mm) deep. The SRB-1 is shipped from the factory fully assembled and ready for use.

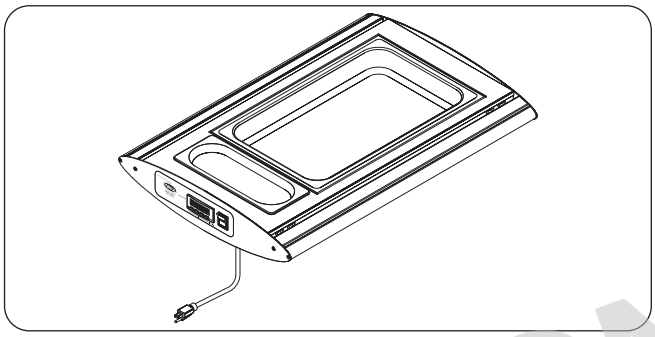

Model SRB-1

Model SRBW-1

The Serv-Rite Buffet Warmer (SRBW) is a heated shelf with overhead halogen heat lamps and a glass sneeze guard. It is designed to hold either one full-size, two half-size, or three third-size steam table pans up to 2-1/2″ (64 mm) deep. The SRBW-1 requires installation of the glass sneeze guard before it is ready for use.

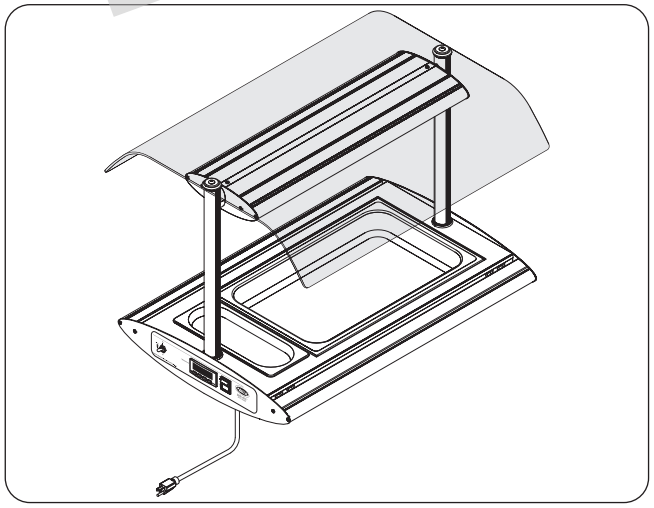

Model SRBW-1

Model SRG-1

The Serv-Rite Glass Shelf (SRG) is a portable heated glass shelf. The SRG-1 is shipped from the factory fully assembled and ready for use.

Model SRSS-1

The Serv-Rite Stone Shelf (SRSS) is a portable heated stone shelf. The SRSS-1 is shipped from the factory fully assembled and ready for use.

NOTE: Stone surfaces are a simulated stone solid surface.

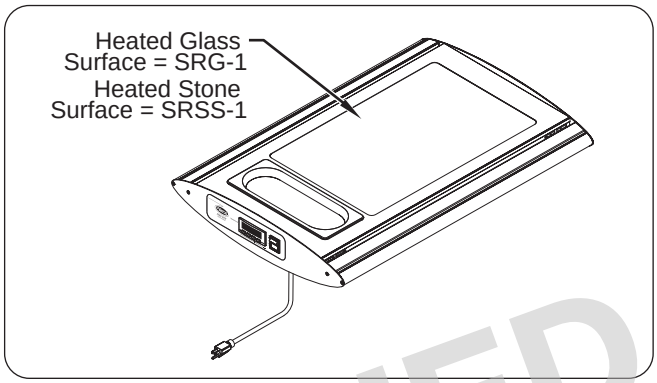

Model SRG-1 and SRSS-1

Model SRGBW-1

The Serv-Rite Glass Shelf Buffet Warmer (SRGBW) is a heated glass shelf with overhead halogen heat lamps and a glass sneeze guard. The SRGBW-1 requires installation of the glass sneeze guard before it is ready for use.

Model SRSSBW-1

The Serv-Rite Stone Shelf Buffet Warmer (SRSSBW) is a heated stone shelf with overhead halogen heat lamps and a glass sneeze guard. The SRSSBW-1 requires installation of the glass sneeze guard before it is ready for use.

NOTE: Stone surfaces are a simulated stone solid surface.

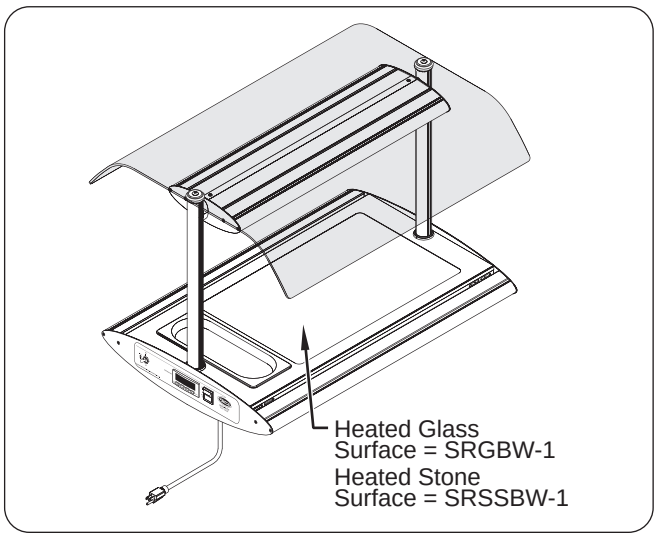

Model SRGBW-1 and SRSSBW-1

NOTE: An extended heated shelf is available for SRG-1, SRSS-1, SRGBW-1, and SRSSBW-1 models. Refer to the OPTIONS AND ACCESSORIES *section for details.*

DISCONTINUED

MODEL DESIGNATION

S R B - X - E X T

- Serv-Rite
- B = Heated Shelf
  - G = Heated Glass Shelf
  - SS = Heated Stone Shelf
  - BW = Heated Shelf Buffet Warmer
  - GBW = Heated Glass Shelf Buffet Warmer
  - SSBW = Heated Stone Shelf Buffet Warmer
- X = Full-Size Pan Capacity
- EXT = Extended Heated Shelf

SPECIFICATIONS

Plug Configurations

Units are supplied from the factory with an electrical cord and plug installed. Plugs are supplied according to the application.

⚠ WARNING

ELECTRIC SHOCK HAZARD: Plug unit into a properly grounded electrical receptacle of the correct voltage, size, and plug configuration. If plug and receptacle do not match, contact a qualified electrician to determine and install proper voltage and size electrical receptacle.

NOTE: Receptacle not supplied by Hatco.

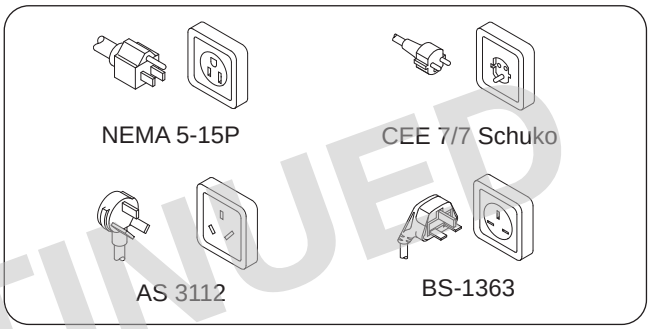

Plug Configurations

DISCONTINUED

Electrical Rating Chart — SRB and SRG Series

Model	Voltage	Watts	Amps	Plug Configuration	Shipping Weight
SRB-1	120	500	4.2	NEMA 5-15P	42 lbs. (19 kg)
	230 (CE)	500	2.2	CEE 7/7 Schuko, AS 3112, or BS-1363	42 lbs. (19 kg)
SRBW-1*	120	800 (1100)	6.7 (9.2)	NEMA 5-15P	68 lbs. (31 kg)
	230 (CE)	800 (1100)	3.5 (4.8)	CEE 7/7 Schuko, AS 3112, or BS-1363	68 lbs. (31 kg)
SRG-1	120	350	2.9	NEMA 5-15P	35 lbs. (16 kg)
	230 (CE)	350	1.5	CEE 7/7 Schuko, AS 3112, or BS-1363	35 lbs. (16 kg)
SRG-1-EXT	120	440	3.7	NEMA 5-15P	37 lbs. (17 kg)
	230 (CE)	440	1.9	CEE 7/7 Schuko, AS 3112, or BS-1363	37 lbs. (17 kg)
SRGBW-1*	120	650 (950)	5.4 (7.9)	NEMA 5-15P	61 lbs. (28 kg)
	230 (CE)	650 (950)	2.8 (4.1)	CEE 7/7 Schuko, AS 3112, or BS-1363	61 lbs. (28 kg)
SRGBW-1-EXT*	120	740 (1040)	6.2 (8.7)	NEMA 5-15P	63 lbs. (29 kg)
	230 (CE)	740 (1040)	3.2 (4.5)	CEE 7/7 Schuko, AS 3112, or BS-1363	63 lbs. (29 kg)

The shaded areas contain electrical information for International models only.

* Watt and amp ratings in parentheses are for units with two optional 300 W halogen bulbs. Ratings without parentheses are for units with the standard two 150 W halogen bulbs.

SPECIFICATIONS

Electrical Rating Chart — SRSS Series

Model	Voltage	Watts	Amps	Plug Configuration	Shipping Weight
SRSS-1	120	350	2.9	NEMA 5-15P	35 lbs. (16 kg)
	230 (CE)	350	1.5	CEE 7/7 Schuko, AS 3112, or BS-1363	35 lbs. (16 kg)
SRSS-1-EXT	120	440	3.7	NEMA 5-15P	37 lbs. (17 kg)
	230 (CE)	440	1.9	CEE 7/7 Schuko, AS 3112, or BS-1363	37 lbs. (17 kg)
SRSSBW-1*	120	650 (950)	5.4 (7.9)	NEMA 5-15P	61 lbs. (28 kg)
	230 (CE)	650 (950)	2.8 (4.1)	CEE 7/7 Schuko, AS 3112, or BS-1363	61 lbs. (28 kg)
SRSSBW-1-EXT*	120	740 (1040)	6.2 (8.7)	NEMA 5-15P	63 lbs. (29 kg)
	230 (CE)	740 (1040)	3.2 (4.5)	CEE 7/7 Schuko, AS 3112, or BS-1363	63 lbs. (29 kg)

The shaded areas contain electrical information for International models only.

* Watt and amp ratings in parentheses are for units with two optional 300 W halogen bulbs. Ratings without parentheses are for units with the standard two 150 W halogen bulbs.

DISCONTINUED

Dimensions — SRB Series

Model	Width (A)	Top Depth (B)†	Bottom Depth (C)	Height (D)	Footprint Width (E)	Footprint Depth (F)
SRB-1	31-3/4″ (806 mm)	----- -----	22-1/8″ (562 mm)	5-3/8″ (136 mm)	28-1/2″ (724 mm)	13″ (330 mm)
SRBW-1‡	32-5/16″ (820 mm)	26″ (660 mm)	22-1/8″ (562 mm)	21-7/8″ (556 mm)	28-1/2″ (724 mm)	13″ (330 mm)

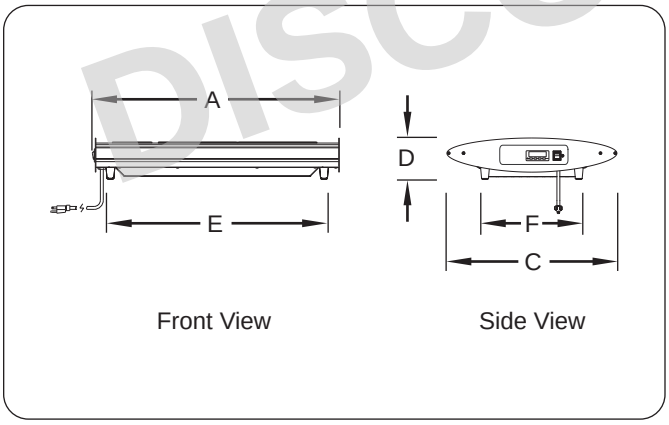

SRB-1 Dimensions

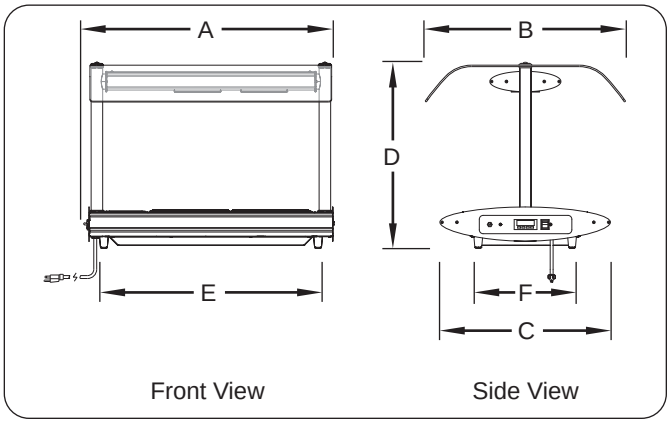

SRBW-1 Dimensions

† Top Depth (B) has a tolerance of +/- 1/8″ (3 mm). Units with a single-sided sneeze guard have a Top Depth (B) of 19-7/8” (504 mm).

‡ Add 2” (51 mm) to Height (D) if equipped with optional extended support posts.

NOTE: SRBW-1 units have optional factory-installed extended support posts available. Refer to the OPTIONS AND ACCESSORIES section for more details.

Dimensions — SRG and SRSS Series

Model	Width (A)	Top Depth (B)†	Bottom Depth (C)	Height (D)	Footprint Width (E)	Footprint Depth (F)	Surface Width (G)	Surface Depth (H)
SRG-1 and SRSS-1	31-3/4″ (806 mm)	----- -----	22-1/8″ (560 mm)	5-3/8″ (136 mm)	28-1/2″ (724 mm)	13″ (330 mm)	20-5/8″ (524 mm)	11-3/4″ (300 mm)
SRG-1-EXT and SRSS-1-EXT	31-3/4″ (806 mm)	----- -----	22-1/8″ (560 mm)	5-3/8″ (136 mm)	28-1/2″ (724 mm)	13″ (330 mm)	25-3/4″ (655 mm)	11-3/4″ (300 mm)
SRGBW-1‡ and SRSSBW-1‡	32-5/16″ (820 mm)	26″ (660 mm)	22-1/8″ (560 mm)	21-7/8″ (556 mm)	28-1/2″ (724 mm)	13″ (330 mm)	20-5/8″ (524 mm)	11-3/4″ (300 mm)
SRGBW-1-EXT‡ and SRSSBW-1-EXT‡	32-5/16″ (820 mm)	26″ (660 mm)	22-1/8″ (560 mm)	21-7/8″ (556 mm)	28-1/2″ (724 mm)	13″ (330 mm)	25-3/4″ (655 mm)	11-3/4″ (300 mm)

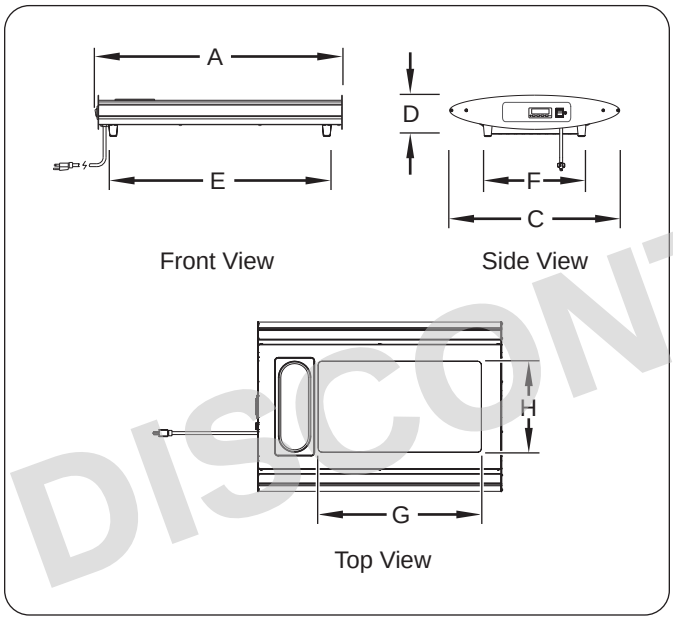

SRG-1 and SRSS-1 Dimensions

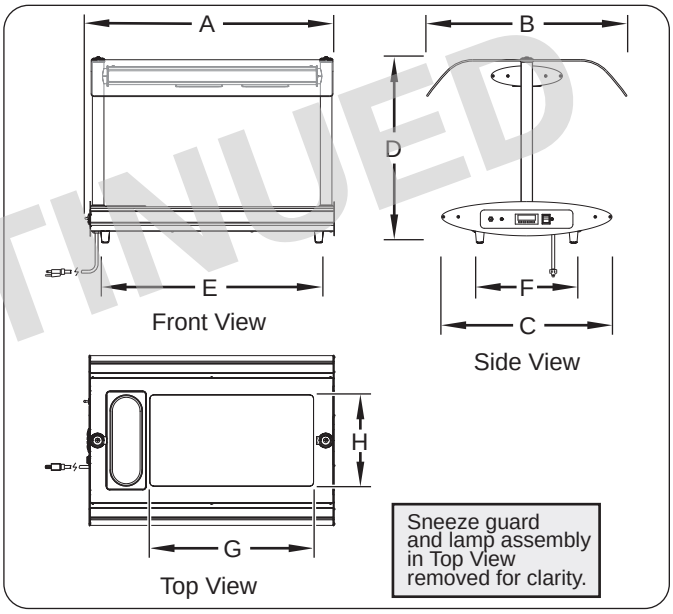

SRGBW-1 and SRSSBW-1 Dimensions

DISCONTINUED

† Top Depth (B) has a tolerance of +/- 1/8″ (3 mm). Units with a single-sided sneeze guard have a Top Depth (B) of 19-7/8” (504 mm).

‡ Add 2” (51 mm) to Height (D) if equipped with optional extended support posts.

NOTE: SRGBW-1 and SRSSBW-1 units have optional factory-installed extended support posts available. Refer to the OPTIONS AND ACCESSORIES section for more details.

INSTALLATION

General

Serv-Rite™ SRBW-1, SRGBW-1, and SRSSBW-1 models are shipped with most components pre-assembled. The glass sneeze guard must be installed on location. Serv-Rite SRB-1, SRG-1, and SRSS-1 models are shipped fully assembled and ready for use. Care should be taken when unpacking the shipping carton to avoid damage to the unit and components enclosed.

⚠ WARNING

ELECTRIC SHOCK HAZARD: Unit is not weatherproof. Locate unit indoors where ambient air temperature is a minimum of 70°F (21°C).

FIRE HAZARD: Locate unit a minimum of 1″ (25 mm) from combustible walls and materials. If safe distances are not maintained, combustion or discoloration could occur.

1. Remove the unit from the carton.
2. Remove tape and protective packaging from all surfaces of unit.

NOTE: To prevent delay in obtaining warranty coverage, complete online warranty registration. See the IMPORTANT OWNER INFORMATION *section for details.*

3. For SRBW-1, SRGBW-1, and SRSSBW-1 models, install the glass sneeze guard. The glass sneeze guard is installed between two plastic caps at each support post for protection.

NOTICE

Do not attempt to install glass sneeze guard alone. Installation of glass sneeze guard is a two-person job.

a. Place a plastic cap with the flat side facing up on each of the support posts.

b. Carefully place the glass sneeze guard on top of the support posts and plastic caps. Make sure the holes in the glass sneeze guard are aligned with the holes in the plastic caps.

c. Place a plastic cap with the flat side facing down over each of the holes on the glass sneeze guard. Make sure to align the holes in the plastic caps with the holes in the glass sneeze guard.

d. Insert the cap screws through the top plastic caps, the glass sneeze guard, the bottom plastic caps, and into the support posts.

e. Tighten each cap screw until secure. ***NOTICE*: Do not over-tighten the cap screws.**

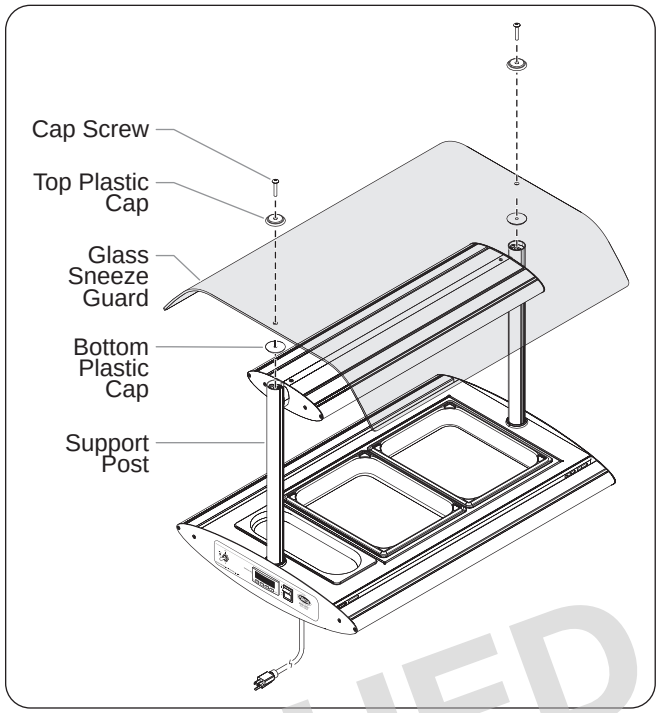

Glass Sneeze Guard Installation

NOTICE

Do not move unit by lifting or pulling by the sneeze guard.

4. Place the unit in the desired location.
   - Make sure the unit is at the proper counter height in an area convenient for use.
   - Make sure the countertop is level and strong enough to support the weight of the unit and food product.
   - Make sure all the feet on the bottom of the unit are positioned securely on the countertop.

DISCONTINUED

General

Use the following procedures to operate Serv-Rite™ Portable Shelves and Buffet Warmers.

⚠ WARNING

Read all safety messages in the IMPORTANT SAFETY INFORMATION section before operating this equipment.

ELECTRIC SHOCK HAZARD: Do not fill SRB and SRBW models with water. They are dry heat units only, not steam table units.

NOTICE

Do not place anything on top of glass sneeze guard. It is not designed to be a weight-bearing component.

Do not slide pans across glass surface, use rough-bottomed pans, or drop anything on glass surface. Scratching or breakage may occur. Damage to glass surface or breakage of glass caused by misuse is not covered under warranty.

Startup

1. Plug the unit into a properly grounded electrical outlet of the correct voltage, size, and plug configuration. See the SPECIFICATIONS section for details.
2. Move the Power ON/OFF (I/O) switch to the ON (I) position.
   - The digital temperature controller will energize and the current temperature of the heated shelf will appear on the display.
   - The phrase “out 1” will appear in the upper left corner of the display to show that the base is in heat mode.
   - For SRBW-1, SRGBW-1, and SRSSBW-1 models; the overhead heat lamps will turn on if the LIGHTS ON/OFF (I/O) switch or the optional dimmer switch was in the ON (I) position the last time the unit was on.

⚠ CAUTION

BURN HAZARD: Some exterior surfaces on the unit will get hot. Use caution when touching these areas.

3. Press and release the set key on the digital temperature controller to verify the setpoint temperature.
   - The setpoint temperature will be shown for 15 seconds. After 15 seconds, the display will revert to the current temperature of the heated shelf. To change the setpoint temperature, refer to “Changing the Setpoint Temperature” in this section.

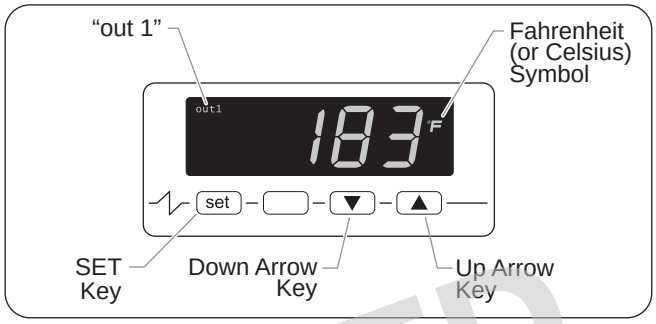

Digital Temperature Controller

NOTE: The digital temperature controller is factory pre-set to a setpoint temperature of 190°F (88°C). Once the setpoint temperature is changed, the new setpoint temperature will remain in memory until it is changed again.

NOTE: SRB and SRG series have a digital temperature controller with a maximum setpoint temperature setting of 220°F (104°C), but the maximum operating temperature of the unit is 200°F (93°C). A temperature setting above 200°F (93°C) will not harm the unit.

SRSS-1 and SRSSBW-1 models have a maximum setpoint temperature setting of 195°F (90°C).

continued...

DISCONTINUED

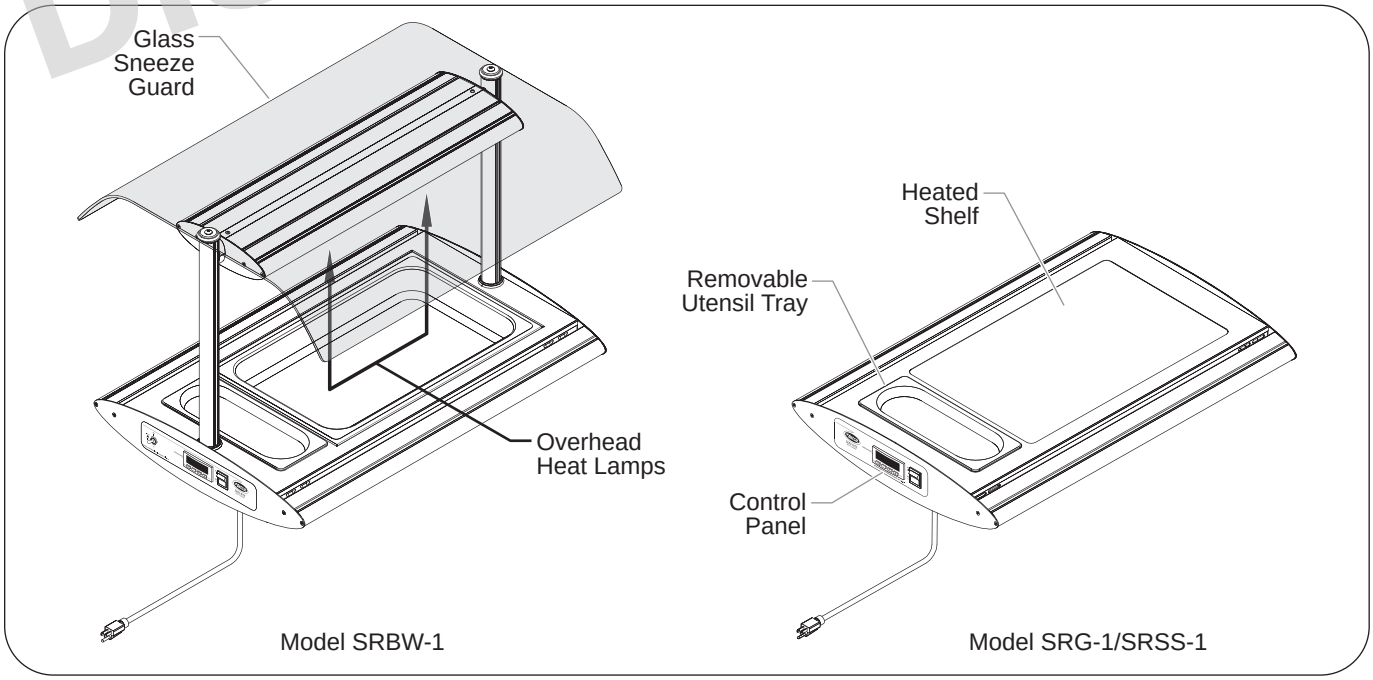

Serv-Rite Components

4. For SRBW-1, SRGBW-1, and SRSSBW-1 models; move the LIGHTS ON/OFF (I/O) switch or the optional dimmer switch to the ON (I) position to turn on the overhead heat lamps.

NOTE: For SRGBW-1 and SRSSBW-1 models; heat generated by the overhead heat lamps is absorbed by the glass or stone surface of the lower heated shelf during the preheat cycle. This causes the temperature shown on the display to rise past the setpoint temperature. The display will return gradually to the setpoint temperature once a pan or food product is placed on the heated surface.

5. Allow the unit 30 minutes to reach operating temperature before placing preheated food product.

Shutdown

1. Move the Power ON/OFF (I/O) switch to the OFF (O) position. The digital temperature controller, heated shelf, and overhead heat lamps (if equipped) will shut off.

NOTE: For SRBW-1, SRGBW-1, and SRSSBW-1 models: If the LIGHTS ON/OFF (I/O) switch or the optional dimmer switch is left in the ON (I) position when the Power ON/OFF (I/O) switch is moved to the OFF (O) position, the lights will shut off as well. The lamps will turn on immediately the next time the Power ON/OFF (I/O) switch is moved to the ON (I) position.

2. Unplug the power cord and allow the unit to cool before performing any cleaning or maintenance.

Changing the Setpoint Temperature

Use the following procedure to change the setpoint temperature of the heated shelf.

1. Press and release the set key. The current setpoint temperature will be shown on the display and ”out 1” will flash in the upper left corner.
2. Press the ▲ key or ▼ key within 15 seconds to change the setpoint temperature. If no key is pressed within 15 seconds, the display will revert to the current temperature of the unit.
3. Press the set key or wait 15 seconds to lock in the new setpoint temperature.

NOTE: SRB and SRG series have a digital temperature controller with a maximum setpoint temperature setting of 220°F (104°C), but the maximum operating temperature of the unit is 200°F (93°C). A temperature setting above 200°F (93°C) will not harm the unit.

SRSS-1 and SRSSBW-1 models have a maximum setpoint temperature setting of 195°F (90°C).

Locking/Unlocking the Digital Temperature Controller

The keys on the digital temperature controller can be locked to prevent unauthorized changes to the settings.

To lock the keys of the digital temperature controller:

- Press and hold both the set key and ▼ key at the same time for over two seconds. The message “Loc” will appear on the display.

To unlock the keys of a digital temperature controller:

- Press and hold both the set key and ▼ key at the same time until the message “UnL” appears on the display.

DISCONTINUED

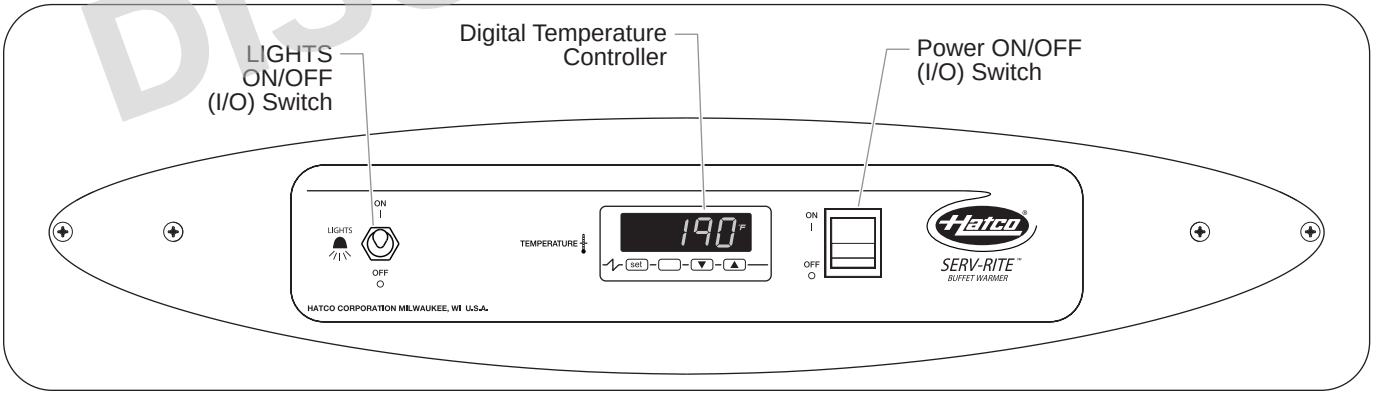

SRBW-1, SRGBW-1, and SRSSBW-1 Control Panel

General

Serv-Rite™ Portable Shelves and Buffet Warmers are designed for maximum durability and performance with minimum maintenance.

⚠ WARNING

ELECTRIC SHOCK HAZARD:

- **Turn OFF power switch, unplug power cord, and allow unit to cool before performing any cleaning, adjustments, or maintenance.**
- **DO NOT submerge or saturate with water. Unit is not waterproof. Do not operate if unit has been submerged or saturated with water.**
- **Do not steam clean or use excessive water on the unit.**
- **Do not clean the unit when it is energized or hot.**

This unit has no "user-serviceable" parts. If service is required on this unit, contact an Authorized Hatco Service Agent or contact the Hatco Service Department at 800-558-0607 or 414-671-6350; fax 800-690-2966; or International fax 414-671-3976.

Cleaning

To preserve the finish of the unit as well as maintain performance, it is recommended that the unit be cleaned daily.

NOTICE

Use non-abrasive cleaners and cloths on glass and metal surfaces. Abrasive cleaners and cloths could scratch the finish of the unit, marring its appearance and making it susceptible to soil accumulation.

Submerging or saturating the unit with water will damage the unit and void the product warranty.

1. Turn off the unit, unplug the power cord, and allow the unit to cool.
2. Remove and wash the utensil tray.
3. Remove and wash steam table pans and tray holder (SRB-1 and SRBW-1 models only).
4. Wipe down all metal surfaces using a damp, non-abrasive cloth. A non-abrasive, cream cleaner may be used for difficult stains.
   a. For SRB-1 and SRBW-1 models, make sure to wipe out the interior of the unit, including underneath the perforated element cover.
5. For SRBW-1, SRGBW-1, and SRSSBW-1 models, clean the glass sneeze guard using a standard glass cleaner.
6. For SRG-1 and SRGBW-1 models, clean the heated glass surface using a standard ceramic glass stove top cleaner.
7. For SRSS-1 and SRSSBW-1 models, refer to the "Cleaning the Stone Surface" section for additional cleaning information.

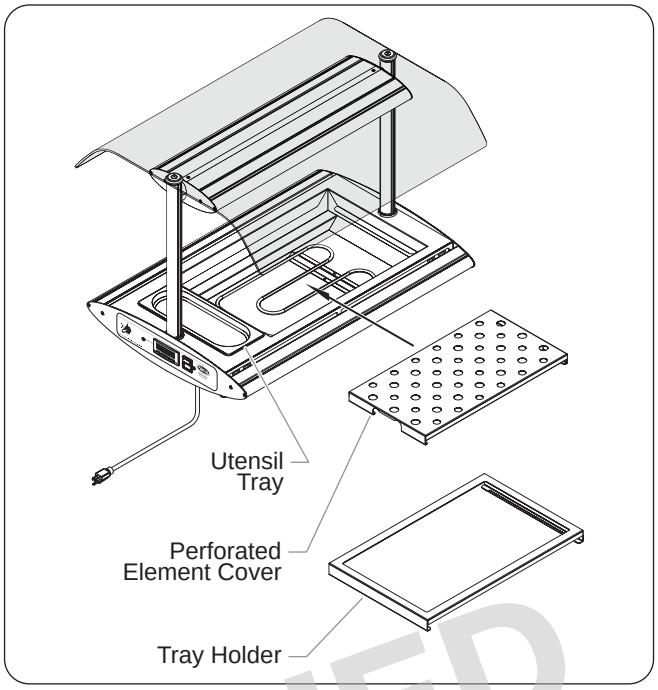

Cleaning Inside an SRBW-1 Model

Cleaning the Stone Surface

Proper use of the products listed below will not damage the stone surface (follow the directions on the product labels).

NOTE: Stone surfaces are a simulated stone solid surface.

⚠ CAUTION

Make sure to clean and sanitize the stone surface properly after deep cleaning the surface using abrasives and before placing food product on unit.

Hard to Remove Stains

For hard-to-remove stains, use the supplied abrasive pad along with an abrasive cleaner such as Ajax®, Comet®, Bon Ami®, or Bar Keeper's Friend®. Additional abrasive pads are available from Hatco (P/N 04.39.049.00). ***NOTICE*: Use supplied abrasive pad on stone surface only.**

NOTE: Do not use steel wool or metal scouring pads.

Mineral Based Stains

For a mineral-based stain, cleaners designed to remove iron or rust are recommended and should not harm the stone surface.

Scratches

For scratches, use sandpaper starting with the coarsest grit and going to finest grit until the scratch disappears. Blend area in with the supplied abrasive pad.

DISCONTINUED

Replacing the Heat Lamps

Use the following procedure to change the halogen heat lamps in SRBW-1, SRGBW-1, and SRSSBW-1 models.

⚠ WARNING

Use only Genuine Hatco Replacement Parts when service is required. Failure to use Genuine Hatco Replacement Parts will void all warranties and may subject operators of the equipment to hazardous electrical voltage, resulting in electrical shock or burn. Genuine Hatco Replacement Parts are specified to operate safely in the environments in which they are used. Some aftermarket or generic replacement parts do not have the characteristics that will allow them to operate safely in Hatco equipment.

Use only low pressure halogen light/heat lamps that meet or exceed National Sanitation Foundation (NSF) standards and are specifically designed for food holding areas.

1. Turn off the unit, unplug the power cord, and allow the unit to cool.
2. Holding one hand under the lamp cover, use a screwdriver to remove the two screws that secure the lamp cover in position.

NOTE: The glass shield inside the lamp cover is loose and will drop down with the lamp cover. Make sure to support the lamp cover with one hand during removal of the screws.

3. Remove the old heat lamp from the lamp holder. The heat lamps are held in position with spring steel contacts on each side of the lamp holder. To remove:
   a. Grasp the old heat lamp bulb and carefully push it into one of the spring steel contacts in the lamp holder to release it from the opposite side spring steel contact.
   b. Pull the free end of the lamp down and remove the lamp from the lamp holder.

NOTICE

Do not touch halogen heat lamps with bare skin. Oils from the skin will cause premature failure of the lamps.

4. While wearing cloth gloves or using other protection, install the new heat lamp into the lamp holder. To install:
   a. Grasp the new heat lamp and carefully push one end into the spring steel contact in one side of the lamp holder.
   b. Lift the other end of the lamp into position against the spring steel contact on the opposite side of the lamp holder (opposing pressure from the spring steel contacts will hold the lamp securely in the lamp holder).
5. Position the lamp cover with glass shield over the heat lamp and secure using the two screws.

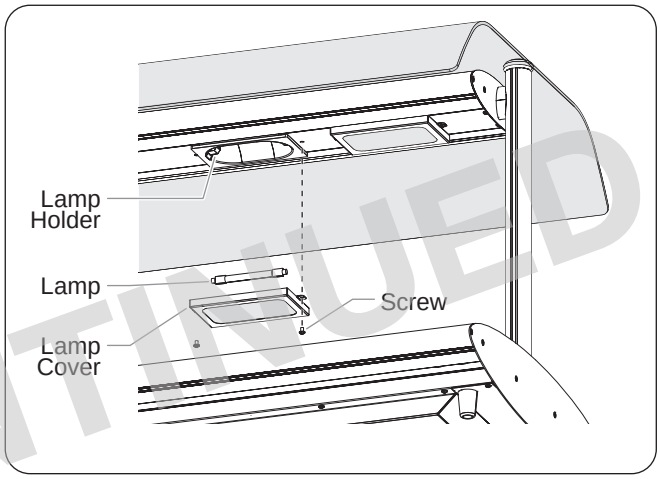

Replacing a Heat Lamp

The following replacement halogen heat lamps are available from the factory or a Hatco Authorized Parts Distributor.

Standard Wattage

150 W, 120 V	02.30.150.00
150 W, 230 V (CE)	02.30.151.00

High Wattage

300 W, 120 V	02.30.117.00
300 W, 230 V (CE)	02.30.126.00

DISCONTINUED

⚠ WARNING

This unit must be serviced by qualified personnel only. Service by unqualified personnel may lead to electric shock or burn.

⚠ WARNING

ELECTRIC SHOCK HAZARD: Turn OFF power switch, unplug power cord, and allow unit to cool before performing any cleaning, adjustments, or maintenance.

Symptom	Probable Cause	Corrective Action
Unit too hot.	Base setpoint temperature too high.	Change the base setpoint temperature on the digital temperature controller to a lower setting.
	For SRGBW-1 and SRSSBW-1 models: Pan(s) or food product not in position on heated glass or stone shelf.	Place pans or food product on heated glass or stone shelf to prevent overhead heat lamps from over-heating glass or stone shelf.
	Unit plugged into incorrect power supply.	Verify with qualified personnel that power supply matches unit specification.
	Digital temperature controller defective.	Contact Authorized Service Agent or Hatco for assistance.
Unit not hot enough.	Base setpoint temperature too low.	Change the base setpoint temperature on the digital temperature controller to a higher setting.
	Location of unit is susceptible to air currents (air conditioning ducts or exhaust fans).	Block air currents or relocate unit.
Unit not working at all.	Unit not plugged in.	Plug unit into proper power supply.
	Unit not turned on.	Move Power ON/OFF (I/O) switch to the ON (I) position.
	Power ON/OFF (I/O) switch defective.	Contact Authorized Service Agent or Hatco for assistance.
	Digital temperature controller defective.	Contact Authorized Service Agent or Hatco for assistance.
	Base heating element burned out.	Contact Authorized Service Agent or Hatco for assistance.
Stone surface material is stained, discolored, or has inconsistent staining/discoloration.	Stone surface is not being cleaned properly.	Clean surface using the “Cleaning the Stone Surface” information in the MAINTENANCE section of this manual. If these methods fail to produce acceptable results, contact Hatco for assistance.

DISCONTINUED

OPTIONS AND ACCESSORIES

Carving Station Pan

The carving station accessory is available for SRB-1 and SRBW-1 models. It consists of a removable carving pan and a drip pan. Use the following procedure to install the carving station.

1. Remove any pans that are currently in the unit.
2. Remove the carving pan tray holder from the unit.
3. Slide the drip pan into the guides on the carving pan tray holder.
4. Replace the carving pan tray holder with drip pan into the unit.
5. Set the carving pan into the carving pan tray holder.

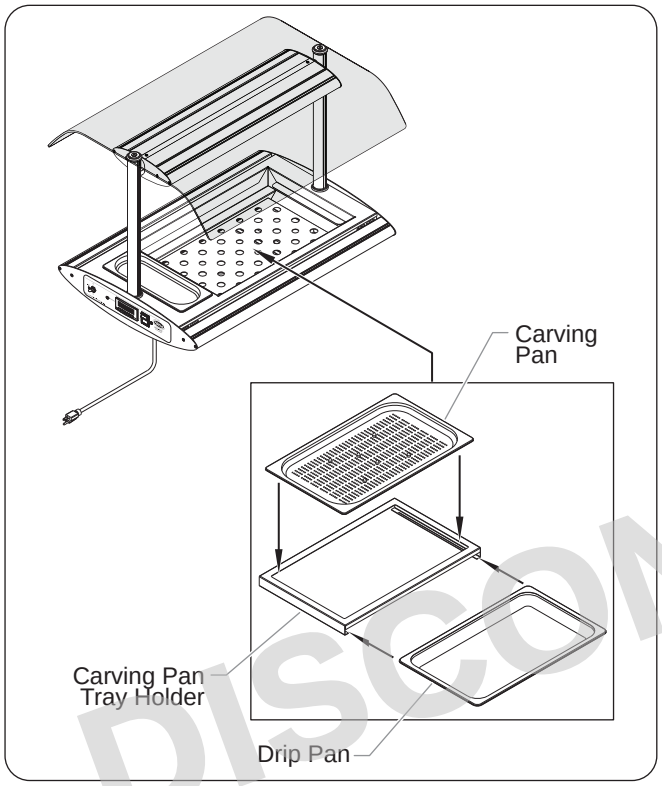

Carving Station

Lights Dimmer Switch

An optional factory-installed dimmer switch is available for SRBW-1, SRGBW-1, and SRSSBW-1 models instead of the standard LIGHTS ON/OFF (I/O) toggle switch. The dimmer switch allows variable control of the heat and light intensity of the overhead halogen heat lamps.

Food Pans

Stainless steel food pans are available in various sizes.

ST PAN 1/3 .....Third-size stainless steel pan — 12-3/4″W x 6-7/8″D x 2-1/2″H (324 x 175 x 64 mm)

ST PAN 1/2 .....Half-size stainless steel pan — 12-3/4″W x 10-3/8″D x 2-1/2″H (324 x 264 x 64 mm)

ST PAN 2.....Full size stainless steel pan at 2-1/2″ (64 mm) deep — 12-3/4″W x 20-3/4″D x 2-1/2″H (324 x 527 x 64 mm)

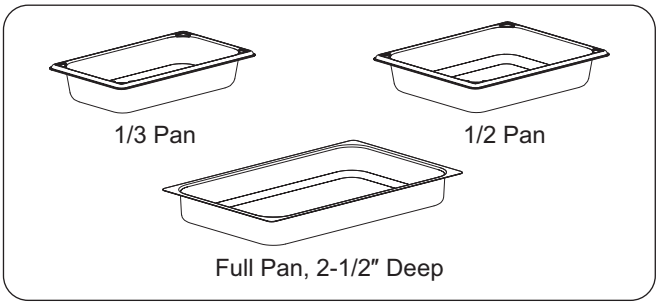

Food Pans

Trivets

Stainless steel or nickel-plated trivets are available in various sizes.

TRIVET (1/4)SS ....Quarter-size stainless steel trivet — 8-1/2″W x 4-1/2″D (216 x 114 mm)

TRIVET (1/2)SS ....Half-size stainless steel trivet — 10-3/16″W x 7-5/8″D (259 x 194 mm)

TRIVET SS .....Full size stainless steel trivet — 10-1/8″W x 18″D (257 x 457 mm)

TRIVET (1/2) .....Half-size nickel-plated trivet — 10-3/16″W x 7-5/8″D (259 x 194 mm)

TRIVET .....Full size nickel-plated trivet — 10-1/8″W x 18″D (257 x 457 mm)

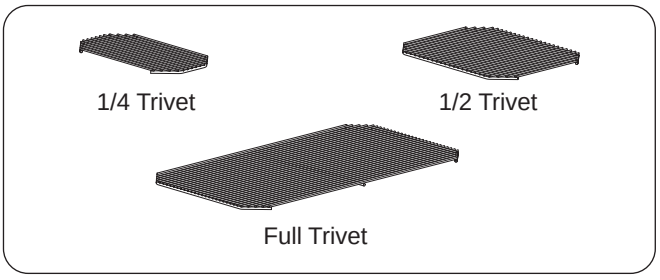

Trivets

DISCONTINUED

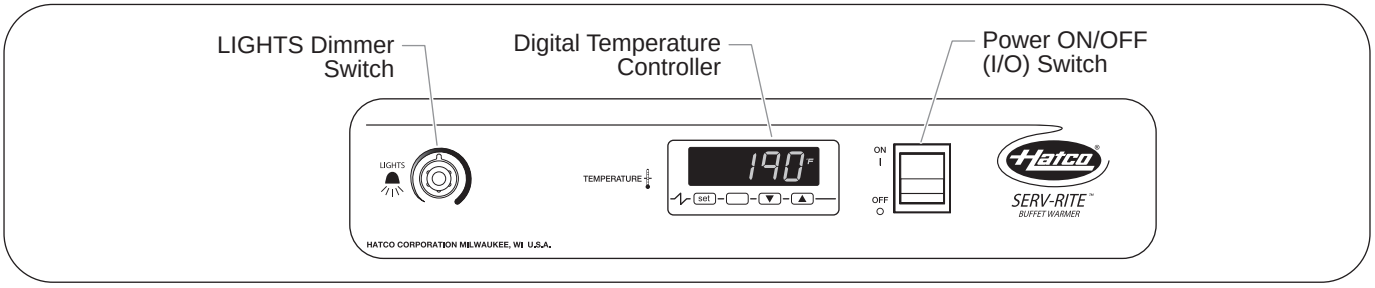

Control Panel with Optional Dimmer Switch

Single-Sided Sneeze Guard

Optional single-sided sneeze guards are available for SRBW-1, SRGBW-1, and SRSSBW-1 models in clear or smoked glass.

Extended Support Posts

Extended support posts are available as factory-installed options for SRBW-1, SRGBW-1, and SRSSBW-1 models. The extended support posts are 2” (51 mm) taller than the standard support post heights.

Extended Heated Shelf

An extended heated shelf is available as an option for SRG, SRGBW, SRSS, and SRSSBW models. Extended heated shelf models come without the utensil tray in order to extend the heated shelf the full width of the unit.

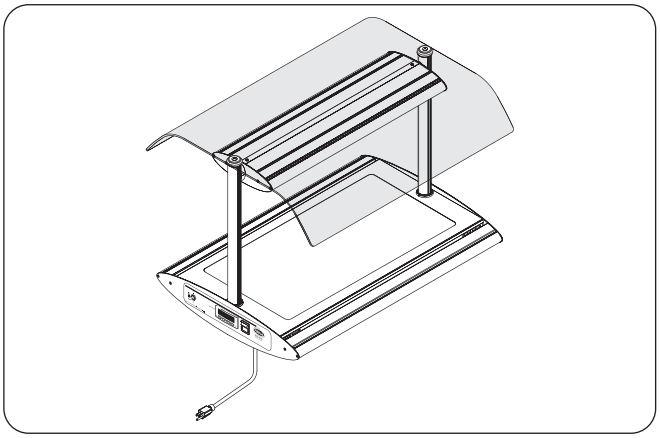

SRGBW-1-EXT with an Extended Heated Shelf

LIMITED WARRANTY

1. PRODUCT WARRANTY

Hatco warrants the products that it manufactures (the “Products”) to be free from defects in materials and workmanship, under normal use and service, for a period of one (1) year from the date of purchase when installed and maintained in accordance with Hatco’s written instructions or 18 months from the date of shipment from Hatco. Buyer must establish the Product’s purchase date by registering the Product with Hatco or by other means satisfactory to Hatco in its sole discretion.

Hatco warrants the following Product components to be free from defects in materials and workmanship from the date of purchase (subject to the foregoing conditions) for the period(s) of time and on the conditions listed below:

a) **One (1) Year Parts and Labor PLUS One (1) Additional Year Parts-Only Warranty:**
   Conveyor Toaster Elements (metal sheathed)
   Drawer Warmer Elements (metal sheathed)
   Drawer Warmer Drawer Rollers and Slides
   Strip Heater Elements (metal sheathed)
   Display Warmer Elements (metal sheathed air heating)
   Holding Cabinet Elements (metal sheathed air heating)
   Heated Well Elements — HWB Series (metal sheathed)

b) **One (1) Year Parts and Labor PLUS Four (4) Years Parts-Only Warranty:**
   3CS and FR Tanks

c) **One (1) Year Parts and Labor PLUS Nine (9) Years Parts-Only Warranty on:**
   Electric Booster Heater Tanks
   Gas Booster Heater Tanks

d) **Ninety (90) Day Parts-Only Warranty:**
   Replacement Parts

THE FOREGOING WARRANTIES ARE EXCLUSIVE AND IN LIEU OF ANY OTHER WARRANTY, EXPRESSED OR IMPLIED, INCLUDING BUT NOT LIMITED TO ANY IMPLIED WARRANTY OF MERCHANTABILITY OR FITNESS FOR A PARTICULAR PURPOSE OR PATENT OR OTHER INTELLECTUAL PROPERTY RIGHT INFRINGEMENT. Without limiting the generality of the foregoing, SUCH WARRANTIES DO NOT COVER: Coated incandescent light bulbs, fluorescent lights, heat lamp bulbs, coated halogen light bulbs, halogen heat lamp bulbs, xenon light bulbs, LED light tubes, glass components, and fuses; Product failure in booster tank, fin tube heat exchanger, or other water heating equipment caused by liming, sediment buildup, chemical attack, or freezing; or Product misuse, tampering or misapplication, improper installation, or application of improper voltage.

2. LIMITATION OF REMEDIES AND DAMAGES

Hatco’s liability and Buyer’s exclusive remedy hereunder will be limited solely, at Hatco’s option, to repair or replacement using new or refurbished parts or Product by Hatco or a Hatco-authorized service agency (other than where Buyer is located outside of the United States, Canada, United Kingdom, or Australia, in which case Hatco’s liability and Buyer’s exclusive remedy hereunder will be limited solely to replacement of part under warranty) with respect to any claim made within the applicable warranty period referred to above. Hatco reserves the right to accept or reject any such claim in whole or in part. In the context of this Limited Warranty, “refurbished” means a part or Product that has been returned to its original specifications by Hatco or a Hatco-authorized service agency. Hatco will not accept the return of any Product without prior written approval from Hatco, and all such approved returns shall be made at Buyer’s sole expense. HATCO WILL NOT BE LIABLE, UNDER ANY CIRCUMSTANCES, FOR CONSEQUENTIAL OR INCIDENTAL DAMAGES, INCLUDING BUT NOT LIMITED TO LABOR COSTS OR LOST PROFITS RESULTING FROM THE USE OF OR INABILITY TO USE THE PRODUCTS OR FROM THE PRODUCTS BEING INCORPORATED IN OR BECOMING A COMPONENT OF ANY OTHER PRODUCT OR GOODS.

DISCONTINUED

HATCO AUTHORIZED PARTS DISTRIBUTORS

ALABAMA
Jones McLeod Appl. Svc.
Birmingham 205-251-0159

ARIZONA
Service Solutions Group
Phoenix 602-234-2443

Byassee Equipment Co.
Phoenix 602-252-0402

CALIFORNIA
Industrial Electric
Commercial Parts & Service, Inc.
Huntington Beach 714-379-7100

Chapman Appl. Service
San Diego 619-298-7106

P & D Appliance
Commercial Parts & Service, Inc.
S. San Francisco 650-635-1900

COLORADO
Hawkins Commercial Appliance
Englewood 303-781-5548

FLORIDA
Whaley Foodservice Repair
Jacksonville 904-725-7800

3Wire Nass Service Co., Inc.
Orlando 407-425-2681

B.G.S.I.
Pompano Beach 954-971-0456

Comm. Appliance Service
Tampa 813-663-0313

GEORGIA
TWC Services
Mableton 770-438-9797

Heritage Service Group
Norcross 866-388-9837

Southeastern Rest. Svc.
Norcross 770-446-6177

HAWAII
Burney's Comm. Service, Inc.
Honolulu 808-848-1466

Food Equip Parts & Service
Honolulu 808-847-4871

ILLINOIS
Parts Town
Lombard 708-865-7278

Eichenauer Elec. Service
Decatur 217-429-4229

Midwest Elec. Appl. Service
Elmhurst 630-279-8000

Cone's Repair Service
Moline 309-797-5323

INDIANA
GCS Service
Indianapolis 317-545-9655

IOWA
Electric Motor Service Co.
Davenport 319-323-1823

Goodwin Tucker Group
Des Moines 515-262-9308

KENTUCKY
Service Solutions Group
Lexington 859-254-8854

Service Solutions Group
Louisville 502-451-5411

LOUISIANA
Chandlers Parts & Service
Baton Rouge 225-272-6620

MARYLAND
Electric Motor Service
Baltimore 410-467-8080

GCS Service
Silver Spring 301-585-7550

MASSACHUSETTS
Ace Service Co., Inc.
Needham 781-449-4220

MICHIGAN
Bildons Appliance Service
Detroit 248-478-3320

Commercial Kitchen Service
Bay City 517-893-4561

Midwest Food Equip. Service
Grandville 616-261-2000

MINNESOTA
GCS Service
Plymouth 800-345-4221

MISSOURI
General Parts
Kansas City 816-421-5400

Commercial Kitchen Services
St. Louis 314-890-0700

Kaemmerlen Parts & Service
St. Louis 314-535-2222

NEBRASKA
Anderson Electric
Omaha 402-341-1414

NEVADA
Burney's Commercial
Las Vegas 702-736-0006

Hi. Tech Commercial Service
N. Las Vegas 702-649-4616

NEW JERSEY
Jay Hill Repair
Fairfield 973-575-9145

Service Plus
Flanders 973-691-6300

NEW YORK
Acme American Repairs, Inc.
Brooklyn 718-456-6544

Alpro Service Co.
Brooklyn 718-386-2515

Appliance Installation
Buffalo 716-884-7425

Duffy's Equipment Services, Inc.
Buffalo 800-836-1014

3Wire Northern
Plattsburgh 800-634-5005

Duffy's Equipment Services, Inc.
Sauquoit 800-836-1014

J.B. Brady, Inc.
Syracuse 315-422-9271

NORTH CAROLINA
Authorized Appliance
Charlotte 704-377-4501

OHIO
Akron/Canton Comm. Svc. Inc.
Akron 330-753-6635

Service Solutions Group
Cincinnati 513-772-6600

Commercial Parts and Service
Columbus 614-221-0057

Electrical Appl. Repair Service
Brooklyn Heights 216-459-8700

E. A. Wichman Co.
Toledo 419-385-9121

OKLAHOMA
Hagar Rest. Service, Inc.
Oklahoma City 405-235-2184

Krueger, Inc.
Oklahoma City 405-528-8883

OREGON
Ron's Service, Inc.
Portland 503-624-0890

PENNSYLVANIA
Elmer Schultz Services
Philadelphia 215-627-5401

FAST Comm. Appl. Service
Philadelphia 215-288-4800

Appliance Installation & Service
Pittsburgh 412-809-0244

K & D Service Co.
Harrisburg 717-236-9039

Electric Repair Co.
Reading 610-376-5444

RHODE ISLAND
Marshall Electric Co.
Providence 401-331-1163

SOUTH CAROLINA
Whaley Foodservice Repair
W. Columbia 803-791-4420

TENNESSEE
Camp Electric
Memphis 901-527-7543

TEXAS
GCS Service
Fort Worth 800-433-1804

Armstrong Repair Service
Houston 713-666-7100

Cooking Equipment Specialist
Mesquite 888-866-9276

Refrigerated Specialist, Inc.
Mesquite 888-866-9276

Commercial Kitchen Repair Co.
San Antonio 210-735-2811

UTAH
La Monica's Rest. Equip. Service
Murray 801-263-3221

VIRGINIA
Daubers
Norfolk 757-855-4097

Daubers
Springfield 703-866-3600

WASHINGTON
3Wire Restaurant Appliance
Seattle 800-207-3146

WISCONSIN
A.S.C., Inc.
Madison 608-246-3160

A.S.C., Inc.
Milwaukee 414-543-6460

CANADA

ALBERTA
Key Food Equipment Service
Edmonton 780-438-1690

BRITISH COLUMBIA
Key Food Equipment Service
Vancouver 604-433-4484

Key Food Equipment Service
Victoria 250-920-4888

MANITOBA
Air Rite, Inc.
Winnipeg 204-895-2300

NEW BRUNSWICK
EMR Services, Ltd.
Moncton 506-855-4228

ONTARIO
R.G. Henderson Ltd.
Toronto 416-422-5580

Choquette - CKS, Inc.
Ottawa 613-739-8458

QUÉBEC
Choquette - CKS, Inc.
Montreal 514-722-2000

Choquette - CKS, Inc.
Québec City 418-681-3944

UNITED KINGDOM

Marren Group
Northants +44(0)1933 666233

DISCONTINUED

HATCO CORPORATION
P.O. Box 340500
Milwaukee, WI 53234-0500 U.S.A.
(800) 558-0607 (414) 671-6350
Parts and Service Fax (800) 690-2966
International Fax (414) 671-3976
partsandservice@hatcocorp.com
www.hatcocorp.com

Register your unit online!
See IMPORTANT OWNER INFORMATION section for details.

Printed in U.S.A. July 2012 P/N 07.04.435.00 Form No. SRM-0712