Project _____

Item # _____

Quantity _____

Toast-Rite® Electric Conveyor Toasters

Models: TRH-50, -60

The Hatco Toast-Rite is a perfect alternative to pop-ups. Toast-Rite features instant color control on every toasted product. Conveyor speed, not temperature, determines toast color. You get faster, more uniform results slice after slice.



TRH-60

Standard features

- Multiple heating elements assure continuous toasting. If an element should fail, Toast-Rite will keep operating at a slightly lower production rate
- Power saving thermostat for energy savings during non-peak serving times
- Capacities of up to 8/min = 480 slices per hour or 10/min = 600 slices per hour
- Toast storage area holds toast at serving temperatures and eliminates condensation, preventing soggy toast
- Stainless steel construction for years of trouble-free service.
- Fully insullated for cooler operation
- Unit comes with 4' (1219 mm) cord and plug

Number of Customers	Model TRH-50	Model TRH-60
30	8 Minutes	6 Minutes
60	15 Minutes	12 Minutes
90	22 Minutes	18 Minutes
120	29 Minutes	24 Minutes

DISCONTINUED

Options (available at time of purchase only)

☐ Control Cover, Bracket and Mounting Hardware

Accessories

☐ Baskets for Jumbo 5.5” (140 mm) Buns (9 per Toaster) 3-Slice Models only
☐ 4" (102 mm) Adjustable Legs (4)
☐ 20 Amp Receptacle, 250V (NEMA 6-20R)
☐ 30 Amp Receptacles: 125V (NEMA 5-30R)
☐ 30 Amp Receptacles: 250V (NEMA 6-30R)

MADE IN THE USA

HATCO CORPORATION | P.O. Box 340500 Milwaukee, WI 53234-0500 U.S.A. | (800) 558-0607 | (414) 671-6350
Fax: (800) 543-7521 | Int’l. Fax: (414) 671-3976 | www.hatcocorp.com | email: equipsales@hatcocorp.com

Toast-Rite® Electric Conveyor Toasters

Models: TRH-50, -60

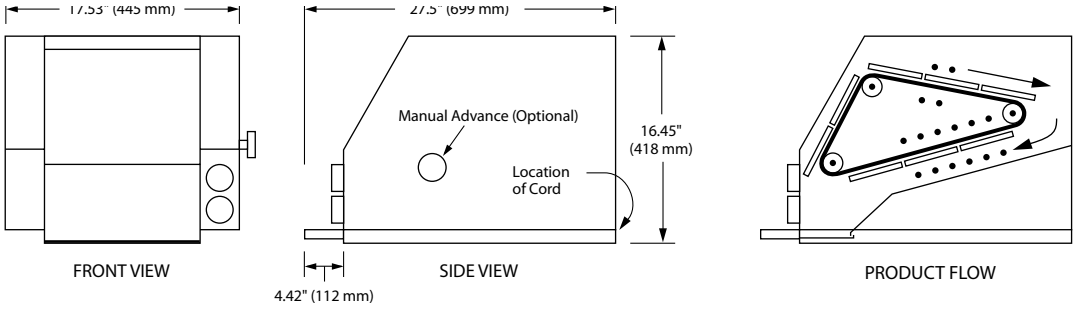

SPECIFICATIONS
Toast-Rite Electric Conveyor Toasters

The shaded areas contain electrical information for International models only

Model	Dimensions (Width x Depth x Height)	Volts	Hertz	Phase	Watts	Amps	Plug	Ship Weight*
TRH-50	17.53" x 27.5" x 16.45" (445 x 699 x 418 mm) Tray extends: 4.42" (112 mm) Basket Size: 10" x 4.63" (254 x 117 mm)	120	60	Single	2738	22.8	NEMA 5-30P	60 lbs. (27 kg)
		208				13.2	NEMA 6-20P	
		240				11.4		
		220	60		2738	12.5	CEE 7/7 Schuko	
		220-230 CE	50		2738-2993	12.5-13.0		
		230-240 CE			2514-2738	10.9-11.4	BS 1363	
		240			2738	11.4		
TRH-60		208	60	Single	3838	18.5	NEMA 6-20P•	
		240				16.0	NEMA 6-20P	
		200	50		3548	17.7	NEMA 6-20P	
		220	60		3838	17.5	No Cap	
		220-230 CE	50		3838-4195	17.5-18.2		
		230-240 CE			3524-3838	15.3-16.0		
		240			3838	16.0		

* Shipping weight includes packaging.
• NEMA 6-30P for Canada
NOTE: Units with "No Cap" plug configuration come with a power cord only (no plug).

DISCONTINUED

CORD LOCATION

Lower right center of unit on back.

PLUG CONFIGURATIONS

NEMA 5-30P

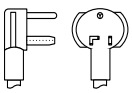

NEMA 6-20P

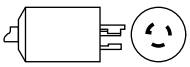

NEMA 6-30P

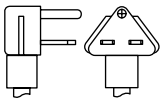

CEE 7/7 Schuko



BS-1363

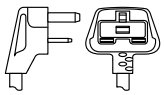

PRODUCT SPECS
Conveyor Toasters

The electric Toast-Rite® Conveyor Toaster shall be a Hatco model ... as manufactured by the Hatco Corporation, Milwaukee, WI 53234 U.S.A. The toaster shall have the capacity to toast up to ... pieces per minute and it shall be rated at ... kW, ... volts, single phase. The toaster shall be of stainless steel design and shall include a front mounted control panel with a toast selector knob, variable speed control knob, and an aluminum toast collector pan. The toaster will have multiple metal sheathed heating elements and an impedance protected motor. It shall be complete with factory attached UL listed 4' (1219 mm) cord and plug.

Comes with 24/7 parts and service assistance (U.S. and Canada only).

HATCO CORPORATION | P.O. Box 340500 Milwaukee, WI 53234-0500 U.S.A. | (800) 558-0607 | (414) 671-6350
Fax: (800) 543-7521 | Int'l. Fax: (414) 671-3976 | www.hatcocorp.com | email: equipsales@hatcocorp.com