Project _____

Item # _____

Quantity _____

Serv-Rite® Portable Buffet Warmers

Models: SRB-1, SRBW-1; SRG-1, SRGBW-1; SRSS-1, SRSSBW-1

The Hatco Serv-Rite® Portable Buffet Warmers are designed to keep prepared foods at optimum serving temperatures without affecting quality. Ideal for use in buffet lines and as hors d'oeuvre displays for self-serve areas. These unique elliptical foodwarmers are available with or without overhead halogen heat lamps and glass sneeze guards.

Standard features

- Base is thermostatically controlled with digital temperature indicating display
- Temperature range is 100° - 200° F (38° - 93° C)
- SRBW, SRGBW and SRSSBW have a top halogen light Heat is controlled from a base mounted toggle switch
- SRSS-1 and SRSSBW-1 base shelf available in Gray Granite, Bermuda Sand and Night Sky (standard) in Simulated Stone–Non-standard colors are non-returnable
- SRB-1 and SRBW-1 include one 2.5" (64 mm) high full size food pan
- Standard models equipped with removable utensil tray for easy cleaning
- Durable stainless steel construction with sturdy aluminum extrusions
- Comes with attached 6' (1829 mm) cord and plug

DISCONTINUED

Options (available at time of purchase only)

Designer Colors – Non-standard colors are non-returnable – Black standard

☐Bold Black ☐Black (standard) ☐Gray Granite ☐White Granite
☐Navy Blue ☐Hunter Green ☐Antique Copper

Gloss Finish – Non-standard colors are non-returnable – Anodized Nickel standard in European Market

☐Bold Black ☐Anodized Nickel

Simulated Stone Base Shelf Colors – SRSS-1 and SRSSBW-1 models – Non-standard colors are non-returnable – Night Sky standard

☐ Gray Granite ☐ Bermuda Sand ☐ Night Sky (standard)

☐Single sided Clear Glass Sneeze Guard in lieu of two-sided Clear Glass Sneeze Guard (BW models only)

☐Smoked Glass Sneeze Guard in lieu of two-sided Clear Glass Sneeze Guard (BW models only)

☐Single sided Smoked Glass Sneeze Guard in lieu of two-sided Clear Glass Sneeze Guard (BW models only)

☐Full Glass Heated Base, in lieu of utensil tray (SRG, SRGBW models only) (adds 90 watts to unit)

☐Full Simulated Stone Heated Base, in lieu of utensil tray (SRSS, SRSSBW models only) (adds 90 watts to unit)

☐Dimmer Switch, in lieu of toggle switch, for overhead lights (BW models only)

☐Two 300 watt bulbs in lieu of two 150 watt bulbs (BW models only) (adds 300 watts to unit)



SRB-1 shown in optional Anodized Nickel Gloss Finish, with 2.5" (64 mm) high food pan (included)



SRBW-1 with optional Anodized Nickel Gloss Finish and single sided clear glass Sneeze Guard and accessory food pans



SRGBW-1 shown in standard Designer Black, smoked glass Sneeze Guard (white food pans shown are not available)



SRG-1 with optional Anodized Nickel Gloss Finish (white food pans shown are not available)

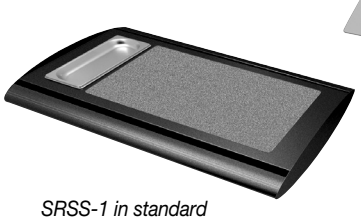

*SRSS-1 in standard Designer Black and Gray Granite Simulated Stone**



SRSSBW-1 in standard Designer Black finish, Night Sky Simulated Stone, Smoked Sneeze Guard and Extended Shelf*

* Models with Simulated Stone are Swanstone®.

Accessories

☐Carving Station Pan (removable spiked perforated insert, frame and juice collection tray) (SRB-1 and SRBW-1 models only) 9 lbs. (4 kg)

☐Half-Size Stainless Steel Pan – 12.75"W x 10.375"D x 2.5"H (324 W x 264 D x 64 H mm)

MADE IN THE USA

HATCO CORPORATION | P.O. Box 340500 Milwaukee, WI 53234-0500 U.S.A.
(800) 558-0607 | (414) 671-6350 | www.hatcocorp.com | equipsales@hatcocorp.com | intlsales@hatcocorp.com

Serv-Rite® Portable Buffet Warmers

Models SRB-1, SRBW-1; SRG-1, SRGBW-1; SRSS-1, SRSSBW-1

SRB-1 MODEL

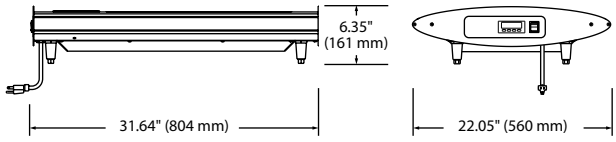

SRG-1 AND SRSS-1 MODELS

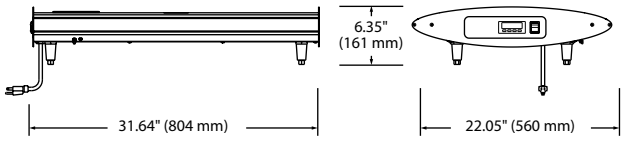

SRBW-1 MODEL

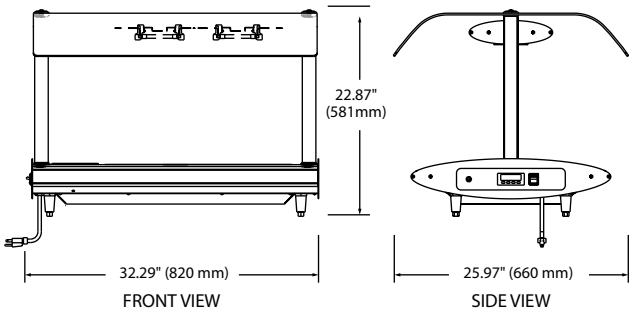

SRGBW-1 AND SRSSBW-1 MODELS

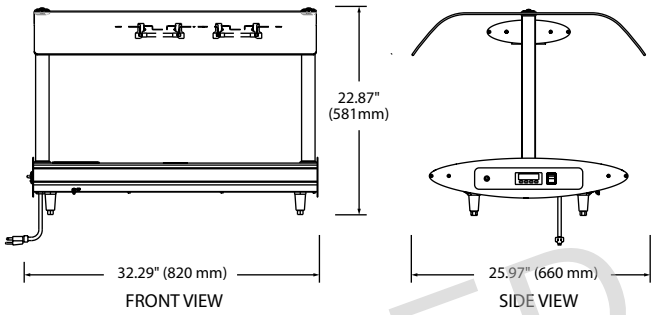

SPECIFICATIONS
Serv-Rite® Portable Buffet Warmers

The shaded areas contain electrical information for International models

Model	Description	Dimensions (Width x Depth x Height)	Heated Base Surface (Width x Depth)	Voltage	Phase	Watts	Amps	Plug	Ship Weight*
SRB-1	Pan, utensil tray	31.64" x 22.05" x 6.35" (804 x 560 x 161 mm)	———	120	Single	500	4.2	NEMA 5-15P	50 lbs. (23 kg)
				230 (CE)	Single	500	2.2	CEE 7/7 Schuko, AS 3112 or BS-1363	
SRBW-1*	Pan, utensil tray, overhead heat	32.29" x 25.97" x 22.87" (820 x 660 x 581 mm)	———	120	Single	800 (1100)	6.7 (9.2)	NEMA 5-15P	104 lbs. (47 kg)
				230 (CE)	Single	800 (1100)	3.5 (4.8)	CEE 7/7 Schuko, AS 3112 or BS-1363	
SRG-1	Heated glass base, utensil tray	31.64" x 22.05" x 6.35" (804 x 560 x 161 mm)	20.625" x 11.81" (524 x 300 mm)	120	Single	350	2.9	NEMA 5-15P	46 lbs. (21 kg)
				230 (CE)	Single	350	1.5	CEE 7/7 Schuko, AS 3112 or BS-1363	
SRGBW-1*	Heated glass base, utensil tray, overhead heat	32.29" x 25.97" x 22.87" (820 x 660 x 581 mm)	20.625" x 11.81" (524 x 300 mm)	120	Single	650 (950)	5.4 (7.9)	NEMA 5-15P	108 lbs. (49 kg)
				230 (CE)	Single	650 (950)	2.8 (4.1)	CEE 7/7 Schuko, AS3112 or BS-1363	
SRSS-1	Heated simulated stone base, utensil tray	31.64" x 22.05" x 6.35" (804 x 560 x 161 mm)	20.625" x 11.81" (524 x 300 mm)	120	Single	350	2.9	NEMA 5-15P	48 lbs. (22 kg)
				230 (CE)	Single	350	1.5	CEE 7/7 Schuko, AS3112 or BS-1363	
SRSSBW-1*	Heated simulated stone base, utensil tray, overhead heat	32.29" x 25.97" x 22.87" (820 x 660 x 581 mm)	20.625" x 11.81" (524 x 300 mm)	120	Single	650 (950)	5.4 (7.9)	NEMA 5-15P	102 lbs. (46 kg)
				230 (CE)	Single	650 (950)	2.8 (4.1)	CEE 7/7 Schuko, AS3112 or BS-1363	

* Shipping weight includes packaging.

***** Watt and amp ratings in parentheses are for units with two optional 300 W halogen bulbs. Ratings without parentheses are for units with the standard two 150 W halogen bulbs.

CORD LOCATION

Control side.

PLUG CONFIGURATIONS

NEMA 5-15P

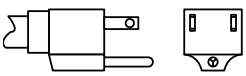

CEE 7/7 Schuko

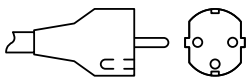

AS3112

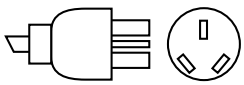

BS-1363

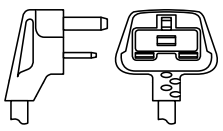

PRODUCT SPECS
SERV-RITE® Portable Buffet Warmer

The Portable Buffet Warmers shall be a Serv-Rite® Model … as manufactured by the Hatco Corporation, Milwaukee, WI 53234 U.S.A.

The Portable Buffet Warmers shall be rated at … watts, … volts, and … inches (millimeters) in overall width. It shall consist of food-safe material, thermostatically-controlled heated base, halogen overhead heat (SRBW-1, SRGBW-1, and SRSSBW-1 models only) and a 6' (1829 mm) cord with plug attached.

Warranty consists of 24/7 parts and service assistance (US and Canada only).

DISCONTINUED

HATCO CORPORATION | P.O. Box 340500 Milwaukee, WI 53234-0500 U.S.A.

(800) 558-0607 | (414) 671-6350 | www.hatcocorp.com | equipsales@hatcocorp.com | intlsales@hatcocorp.com