Project _____

Item # _____

Quantity _____

Multi Contact Grills

Models: MCG10G, MCG14G, MCG20G
MCG10S, MCG14S, MCG20S
MCG10GS, MCG14GS, MCG20GS

Hatco Corporation introduces the Multi Contact Grill as a new addition to our light cooking line of equipment that gives you the flexibility to grill paninis, sandwiches with breads of different sizes and thickness, snacks, vegetables, meats, quesadillas, fish, and hamburgers, to name a few, all on the same piece of equipment!

Standard features

- Patented Heating Element Pack provides exceptional heat distribution over the entire surface of the plates for even, uniform cooking
- Easy Clean System® for quick, efficient cleaning
- Thermostatic control from 120°F to 570°F (50°C to 300°C) for precision cooking
- Dishwasher-safe, enamel-coated cast iron Grooved Top and Bottom Plate are standard
- Grooved Plates are interchangeable with the Smooth Plates
- 6' (1829 mm) cord with plug attached
- Cord location is under base at center of unit
- Stainless Steel frame
- Removable drip tray with handles

easy clean System®



MCG20G with two Top and one Bottom Grooved Cast Iron Cooking Plates (standard)



MCG10G with one Top and one Bottom Grooved Cast Iron Cooking Plates (standard)



MCG14G with one Top and one Bottom Grooved Cast Iron Cooking Plates (standard)

DISCONTINUED

Accessories

Smooth Top Enamel Coated Cast Iron Cooking Plate
- ☐ ST-S for MCG10xx models only
- ☐ ST-M for MCG14xx models only
- ☐ ST-LL for MCG20xx models only Left Side
- ☐ ST-LR for MCG20xx models only Right Side

Smooth Bottom Enamel Coated Cast Iron Cooking Plate
- ☐ SB-S for MCG10xx models only
- ☐ SB-M for MCG14xx models only
- ☐ SB-L for MCG20xx models only

Grooved Top Enamel-Coated Cast Iron Cooking Plate
- ☐ GT-S for MCG10xx models only
- ☐ GT-M for MCG14xx models only
- ☐ GT-LL for MCG20xx models only Left Side
- ☐ GT-LR for MCG20xx models only Right Side

Grooved Bottom Enamel-Coated Cast Iron Cooking Plate
- ☐ GB-S for MCG10xx models only
- ☐ GB-M for MCG14xx models only
- ☐ GB-L for MCG20xx models only

Intertek Intertek

120V, NEMA 5-15P models are US only

For operation, location and safety information, please refer to the Installation and Operating Manual.

HATCO CORPORATION | P.O. Box 340500 Milwaukee, WI 53234-0500 U.S.A. | (414) 671-6350

www.hatcocorp.com | support@hatcocorp.com | Find a Hatco Rep | Image Library | Document Library | Patents | Chat

Multi Contact Grills

Models: MCG10G, MCG14G, MCG20G, MCG10S, MCG14S, MCG20S, MCG10GS, MCG14GS, MCG20GS

MCG Models

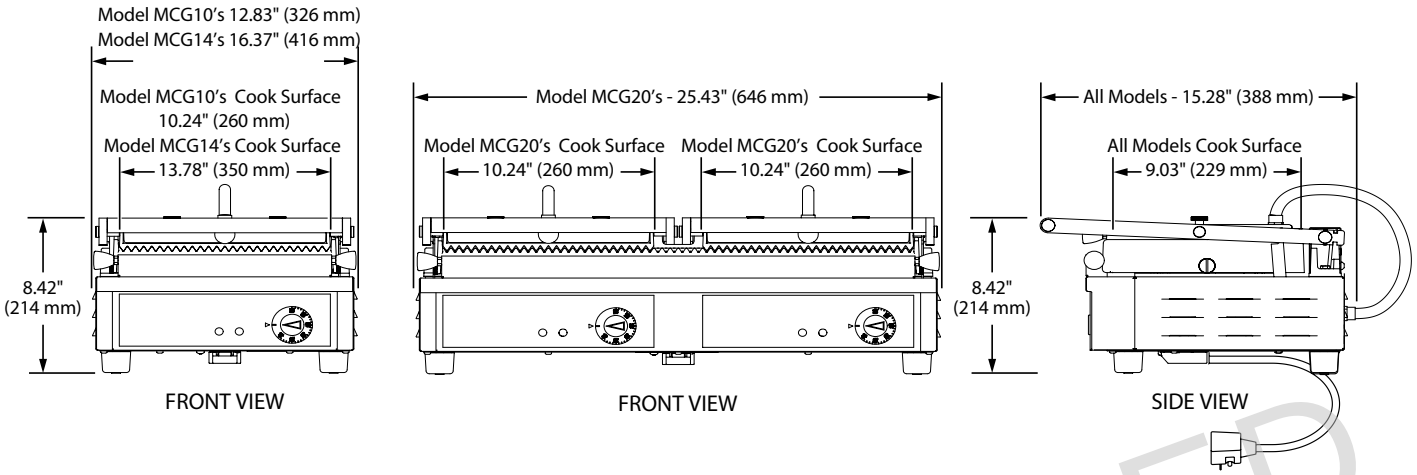

SPECIFICATIONS
Top Grooved, Bottom Grooved (Plates) - Multi Contact Grills

Model	Item No.	Dimensions (Width x Depth x Height)	Max. Product Thickness	Voltage	Phase	Watts	Amps	Plug	Approx. Ship Weight
MCG10G	MCG10G.515P	12.83" x 15.28" x 8.42" (326 x 388 x 214 mm)	2.75" (70 mm)	120	Single	1800	15.0	NEMA 5-15P♣	47 lbs. (21 kg)
	MCG10G.520P							NEMA 5-20P	
MCG14G	MCG14G.515P	16.37" x 15.28" x 8.42" (416 x 388 x 214 mm)	2.75" (70 mm)	120	Single	1800	15.0	NEMA 5-15P♣	62 lbs. (28 kg)
	MCG14G.520P							NEMA 5-20P	
	MCG14G.615P.01			208↗		1950	9.4	NEMA 6-15P	
	MCG14G.615P.01			240↗		2600	10.8		
MCG20G	MCG20G.620P	25.43" x 15.28" x 8.42" (646 x 388 x 214 mm)	2.75" (70 mm)	208↗	Single	2820	13.6	NEMA 6-20P	93 lbs. (42 kg)
				240↗		3760	15.7		

DISCONTINUED

SPECIFICATIONS
Top Smooth, Bottom Smooth (Plates) - Multi Contact Grills

Model	Item No.	Dimensions (Width x Depth x Height)	Max. Product Thickness	Voltage	Phase	Watts	Amps	Plug	Approx. Ship Weight
MCG14S	MCG14S.515P	16.37" x 15.28" x 8.42" (416 x 388 x 214 mm)	2.75" (70 mm)	120	Single	1800	15.0	NEMA 5-15P♣	62 lbs. (28 kg)
	MCG14S.520P							NEMA 5-20P	
	MCG14S.615P.01			208↗		1950	9.4	NEMA 6-15P	
	MCG14S.615P.01			240↗		2600	10.8		

♣ Not available for Canada.
↗ Unit is designed to operate on supply voltages between 208V and 240V.

Multi Contact Grills

Models: MCG10G, MCG14G, MCG20G, MCG10S, MCG14S, MCG20S, MCG10GS, MCG14GS, MCG20GS

SPECIFICATIONS
Top Grooved, Bottom Smooth (Plates) - Multi Contact Grills

Model	Item No.	Dimensions (Width x Depth x Height)	Max. Product Thickness	Voltage	Phase	Watts	Amps	Plug	Approx. Ship Weight
MCG20GS	MCG20GS.620P	25.43" x 15.28" x 8.42" (646 x 388 x 214 mm)	2.75" (70 mm)	208↜	Single	2820	13.6	NEMA 6-20P	93 lbs. (42 kg)
				240↜		3760	15.7		

↜Unit is designed to operate on supply voltages between 208V and 240V.

CORD LOCATION
Under base at center of unit.

PLUG CONFIGURATIONS

NEMA 5-15P

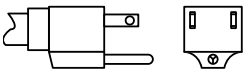

NEMA 5-20P

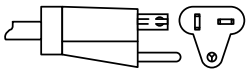

NEMA 6-15P

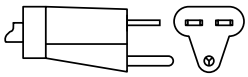

NEMA 6-20P

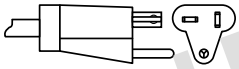

DISCONTINUED

PRODUCT SPECS
Multi Contact Grills

The Multi Contact Grill shall be a Model … as distributed by the Hatco Corporation, Milwaukee, WI 53234 U.S.A.

The Multi Contact Grill shall be rated at … watts, … volts, and … inches (millimeters) in overall width. It shall have a grooved top and bottom enamel coated cast iron cooking plate, thermostatically-controlled with a temperature indicator light and power light, patented Heating Element Pack for even heat distribution, removable drip tray with handles, Easy Clean System® and a 6' (1829 mm) cord with plug attached.

Accessories shall include smooth top and bottom enamel coated cast iron cooking plate for each unit size.

Warranty consists of 24/7 parts and service assistance (U.S. and Canada only).