Project _____

Item # _____

Quantity _____

Refrigerated Slim Drop-In Wells

Models: CWB-S1, -S2, -S3, -S4

Hatco's Refrigerated Slim Drop-In Well is a full-size unit that blankets your pre-chilled food product to retain optimum freshness and taste in one efficient and easy operation – but placed lengthwise. This provides customers with a complete cold well within easy reach, regardless of the sneeze guards.



Model CWB-S4 with optional slant kit, accessory (hotel) food pans additional support bars



Model CWB-S2 with accessory (hotel) food pans and additional support bars

Standard features

- Insulated wells available in 1 to 4 full-size pan configurations, but placed lengthwise
- NSF 7 approved cold wall construction utilizes a refrigerant that keeps food product cold without drying it out

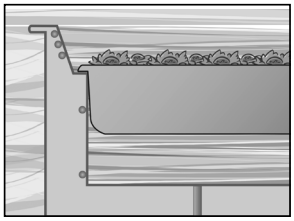

The unique angled inside wall design provides easy access and clear views. The greater surface area of the angled wall and the placement of the coils allow cold air to more effectively blanket your food product.

- Condenser utilizes R-513A refrigerant
- Adjustable condensing unit can rotate 180° on all models for easy venting adjustments and flexibility at installation
- Mobile condensing unit can be moved in 4.855" (123 mm) increments from center to left (away from drain) on the two-, three- and four-pan units (CWB-S1 is rotatable only)
- Easy serviceability with a sight glass, service valves, dryer/filter and a receiver. Long, flexible refrigerant line (ability to pullout condensing unit) for service
- Auto-defrost is activated through an advanced electronic controller programmed at customer location
- Optimal insulation on sides and bottom ensure better cold retention
- Environmentally friendly insulation used throughout
- 1" NPT brass drain simplifies cleaning

DISCONTINUED

Options (available at time of purchase only)

- ☐ Additional Four-Year Parts Only Warranty on the Compressor at Time of Unit Purchase (Not available for export voltages)
- ☐ Slant Kit to give Cold Wells a 5° tilt
- ☐ Gasket (Factory installed and eliminates the need for silicone or other sealants)

Accessories

Pan Support Bars
- ☐ 12" (305 mm)

Stainless Steel Food Pans:
- ☐ Third-Size (2.5" [64 mm] H)
- ☐ Full-Size (2.5" [64 mm] H)
- ☐ Full-Size (6" [152 mm] H)
- ☐ Half-Size (2.5" [64 mm] H)
- ☐ Full-Size (4" [102 mm] H)

- ☐ False Bottom (perforated false bottom)

Wire Trivets Stainless:
- ☐ Half-Size (10.19" [259 mm] W x 7.625 [194 mm] D)
- ☐ Full-Size (10.125" [259 mm] W x 18" [457 mm] D)

For operation, location and safety information, please refer to the Installation and Operating Manual.

HATCO CORPORATION | P.O. Box 340500 Milwaukee, WI 53234-0500 U.S.A. | (414) 671-6350

www.hatcocorp.com | support@hatcocorp.com | Find a Hatco Rep | Image Library | Document Library | Patents | Chat

Refrigerated Slim Drop-In Wells

Models: CWB-S1, -S2, -S3, -S4

Ordering Instructions:

Please specify the following with each order:

1. **Desired Voltage and Hz:**
   120 (60 Hz),
   220, 230 or 240V (50 or 60 Hz)
2. **Number of Drop-In Wells Required:**
   1-, 2-, 3- or 4-pan
   NOTE: only offered as rectangular, full-size (placed lengthwise)
   (12" W x 20" D [305 mm x 508 mm])
3. **Electronic Control Assembly** can be mounted on either side of the Condensing Unit or remotely mounted up to 4 feet (1219 mm) from the unit (cannot be mounted in front of the condensing coil

Option

1. **Slant Option** for CWBR or CWBX-1, -2, -3, -4, -5 or -6
2. **Gasket** to elimnate need for silicone or other sealants

All Models Slant Option

(gray highlight)

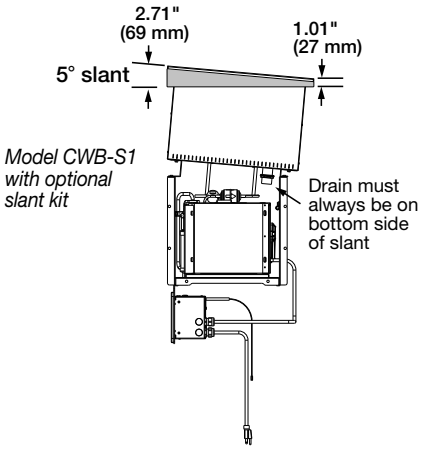

Model CWB-S1 with optional slant kit

All Models False Bottom Accessory

1-part or 2-part, depending on pan size

False Bottom placed on bottom of unit – allows for 8" (203 mm) of ice

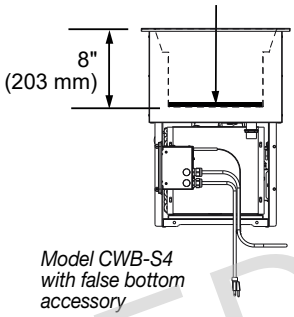

Model CWB-S4 with false bottom accessory

DISCONTINUED

Model CWB-S1, -S2, -S3, -S4

FRONT VIEW

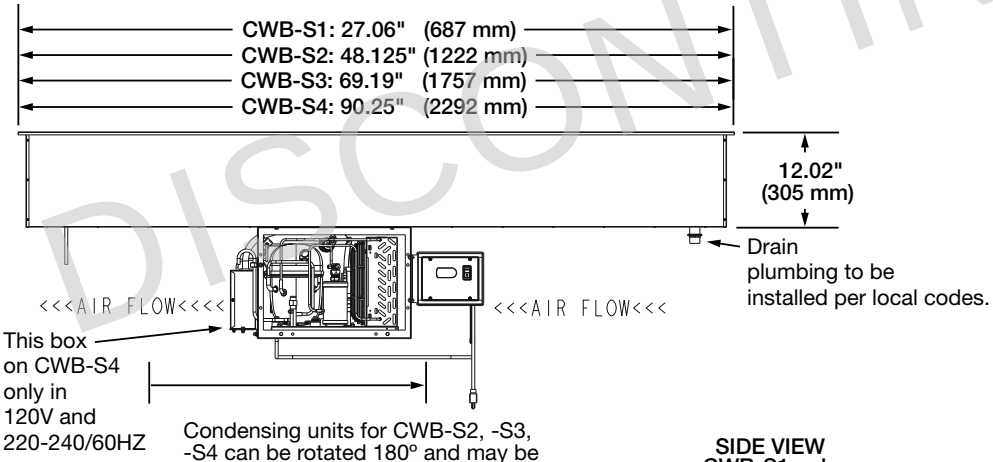

Condensing units for CWB-S2, -S3, -S4 can be rotated 180° and may be moved right to left in 4.855" (123 mm) increments. CWB-S1 rotates only.

SIDE VIEW
CWB-S1 only

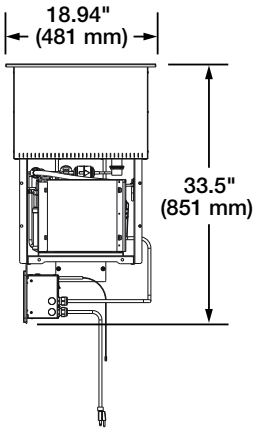

SIDE VIEW
CWB-S2, -S3, -S4

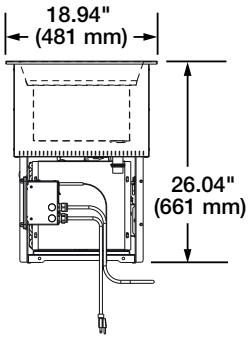

Refrigerated Slim Drop-In Wells

Models: CWB-S1, -S2, -S3, -S4

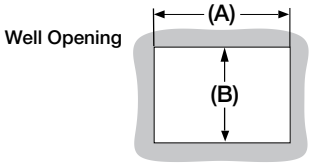

Cutout Dimensions for Slim Refrigerated Drop-In Wells

Model	Minimum Width (A)	Maximum Width (A)	Minimum Depth (B)	Maximum Depth (B)
CWB-S1	25.22" (641 mm)	26.06" (662 mm)	17.06" (433 mm)	17.94" (456 mm)
CWB-S2	46.25" (1175 mm)	47.09" (1196 mm)		
CWB-S3	67.31" (1710 mm)	68.16" (1731 mm)		
CWB-S4	88.375" (2245 mm)	89.22" (2266 mm)		

SPECIFICATIONS
Refrigerated Slim Drop-In Wells

The shaded areas contain electrical information for International models

Model †	Dimensions (Width x Depth x Height) (12.02" [305 mm] Well Height)	Volts	HP Compressor Size	Hz	Watts	Amps	Phase	Plug	Total Heat of Rejection (BTU/Hr)	Approx. Ship Weight
CWB-S1	27.06" x 18.94" x 33.5" (687 x 481 x 851 mm)	120	1/5	60	300	3.8	Single	NEMA 5-15P	1288	146 lbs. (66 kg)
		220/230/240	1/3	50	1089/1190/1296	5.0/5.2/5.4		BS-1363, CEE 7/7 Schuko, AS 3112	–	
				60	1129/1234/1344	5.1/5.4/5.6		CEE 7/7 Schuko, BS-1363	–	
CWB-S2	48.125" x 18.94" x 26.04" (1222 x 481 x 661 mm)	120	1/5	60	300	3.8		NEMA 5-15P	1608	190 lbs. (86 kg)
		220/230/240	1/3	50	1089/1190/1296	5.0/5.2/5.4		BS-1363, CEE 7/7 Schuko, AS 3112	–	
				60	1129/1234/1344	5.1/5.4/5.6		CEE 7/7 Schuko, BS-1363	–	
CWB-S3	69.19" x 18.94" x 26.04" (1757 x 481 x 661 mm)	120	1/3	60	450	5.9		NEMA 5-15P	2439	221 lbs. (100 kg)
		220/230/240	3/8	50	826/904/984	3.8/3.9/4.1		BS-1363, CEE 7/7 Schuko, AS 3112	–	
			1/3	60	1129/1234/1344	5.1/5.4/5.6		CEE 7/7 Schuko, BS-1363	–	
CWB-S4	90.25" x 18.94" x 26.04" (2292 x 481 x 661 mm)	120	5/8	60	800	8.7		NEMA 5-15P	3954	283 lbs. (128 kg)
		220/230/240	1/2	50	826/904/984	3.8/3.9/4.1		BS-1363, CEE 7/7 Schuko, AS 3112	–	
			5/8	60	1956/2138/2328	8.9/9.3/9.7		CEE 7/7 Schuko, BS-1363	–	

† Models shipped with electronic temperature control, pan support bars for full-size pans, condensing unit (can be rotated 180º), auto-defrost, sight glass, service valves and filter-drier.

DISCONTINUED

R-513A REFRIGERANT OPERATING SPECIFICATIONS IN 75°F (24°C) AMBIENT

Refer to the Installation section in the Installation and Operating Manual on the Hatco website

- Suction Pressure: 6-9 PSIG (0.4-0.6 Bar)
- Discharge Pressure : 115-125 PSIG (7.9-8.6 Bar)
- Superheat: 4-10º F (2.2º to 5.6 ºC)
- Subcooling: 5-10º F (2.8º to 5.6 ºC)

FACTORY FILL RATES for R-513A REFRIGERANT

Model	Fill Weight
CWB-S1	1 lb. 5 oz. (0.595 kg)
CWB-S2	1 lb. 7 oz. (0.652 kg)
CWB-S3	1 lb. 5 oz. (0.595 kg)
CWB-S4	2 lb. 3 oz. (0.992 kg)

PLUG CONFIGURATIONS

NEMA 5-15P

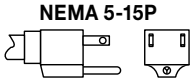

BS 1363

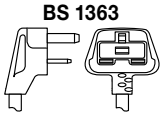

CEE 7-7 SCHUKO

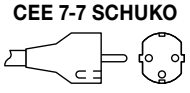

AS 3112

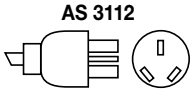

PRODUCT SPECS
Refrigerated Slim Drop-In Wells

The NSF 7 approved Refrigerated Slim Drop-in Well shall be a Model ... as manufactured by the Hatco Corporation, Milwaukee, WI 53234 U.S.A.

With 24/7 parts and service assistance (U.S. and Canada only), the Refrigerated Slim Drop-in Well shall be rated at ... watts, ... volts, ... hp, and be .... inches (millimeters) in overall width and be ... inches (millimeters) in overal depth. It shall utilize R-513A refrigerant and consist of aluminized steel housing with a stainless bezel, an electronic temperature control, pan support bars for full-size pans, condensing unit (can be rotated 180º), compressor, flexible refrigerant lines, sight glass, service valves, receiver, and dryer/filter.

Accessories may include pan support bars, false bottom, trivets and stainless steel food pans.

Warranty consists of 24/7 parts and service assistance (U.S. and Canada only).