Project _____

Item # _____

Quantity _____

Sauce Warmers

Models: KSW-1, -2, -3

Hatco®/Krampouz Sauce Warmers keep sauces warm and ready for deployment. Choose from single, dual or triple sauce warmers. Percise enough to fine-tune the temperature, and keep your sauce at the optimum pouring consistancy.

Standard features

- Stainless Steel frame for durability and reliability
- On/Off switch with a power indicator light
- Thermostatic control from 105˚ - 195˚F (40˚ - 90˚C)
- KSW-2 and -3 features dedicatd controls for each bottle well
- Each Sauce Warmer is supplied with the appropriate number of 3-valve sauce bottles



KSW-1 with accessory Spout Bottle



KSW-2 with accessory Spout Bottles



KSW-3 with accessory Spout Bottles

DISCONTINUED

Accessories

☐ Single Valve Bottle - 1 liter capacity. Plastic bottle and cap with silicone valve. (Designed for thicker sauces, like chocolate)

☐ Three Valve Bottle - 1 liter capacity. Plastic bottle and cap.



Intertek Intertek

For operation, location and safety information, please refer to the Installation and Operating Manual.

HATCO CORPORATION | P.O. Box 340500 Milwaukee, WI 53234-0500 U.S.A. | (414) 671-6350

www.hatcocorp.com | support@hatcocorp.com | Find a Hatco Rep | Image Library | Document Library | Patents | Chat

Sauce Warmers

Models: KSW-1, -2, -3

KSW-1

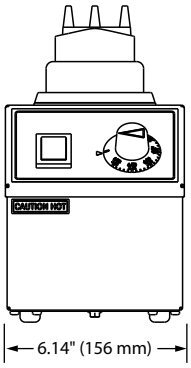

KSW-2

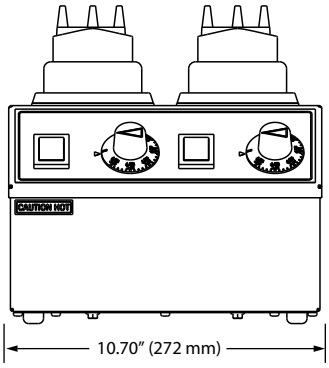

KSW-3

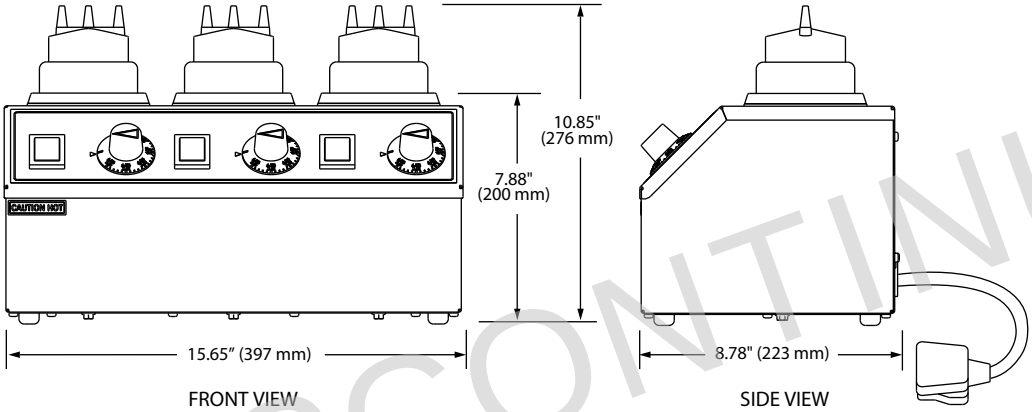

DISCONTINUED

SPECIFICATIONS
Waffle Makers

Model	Item Number	Description	Dimensions (W x D x H)	Voltage	Watts	Amps	Plug	Approx. Ship Weight
KSW-1	KSW.1515	1 bottle well	6.14" x 8.78" x 7.88" (156 x 223 x 200 mm)	120	170	1.5	NEMA 5-15P	4 lbs. (2 kg)
KSW-2	KSW.2515	2 bottle well	10.70" x 8.78" x 7.88" (272 x 223 x 200 mm)	120	340	3.1	NEMA 5-15P	7 lbs. (3 kg)
KSW-3	KSW.3515	3 bottle well	15.65" x 8.78" x 7.88" (397 x 223 x 200 mm)	120	510	4.6	NEMA 5-15P	11 lbs. (5 kg)

CORD LOCATION

Back, lower left of unit.

PLUG CONFIGURATIONS

NEMA 5-15P

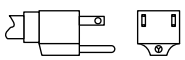

PRODUCT SPECS
Sauce Warmers

The Sauce Warmers shall be Model ... as distributed by the Hatco Corporation, Milwaukee, WI 53234 U.S.A.

The Sauce Warmerr shall be rated at ... watts, ... volts, and be ... inches (millimeters) in overall width.

It shall consist of a stainless steel frame. Sauce Warmers feature thermostatic control from 105˚ - 195˚F (40˚ - 90˚C), On/Off switch with power light and a splatter guard IPX3 standards. All units are equipped with a factory attached 6' (1829 mm) power cord and plug.

Accessories shall include one or three valve bottles.

Warranty consists of 24/7 parts and service assistance (US and Canada only).